FIRST STREET RAIN GARDEN

LAFAYETTE

PROJECT #014-9722

BID SET JUNE 2, 2022

CONSULTANTS:

LANDSCAPE ARCHITECTURE AND ENGINEERING:
RESTORATION DESIGN GROUP, INC.
ANNEKE SWINEHART, PROJECT MANAGER
MATT THOMAS, CIVIL ENGINEER
2332C FIFTH STREET
BERKELEY, CA 94710
(510) 644-2798

STRUCTURAL ENGINEERING:
KENNETH R. HUGHES, STRUCTURAL ENGINEER
3620 MT DIABLO BLVD
LAFAYETTE, CA 94549
(925) 284-2808

LIGHTING DESIGN:
WKM ELECTRICAL CONSULTANTS INC.
TIFFANY KANE, PRINCIPAL
3397 MT. DIABLO BLVD, SUITE C
LAFAYETTE, CA 94549
(925) 385-0649

IRRIGATION:
BROOKWATER IRRIGATION CONSULTANTS
JANET LUEHRS, PRINCIPAL
480 ST. JOHN STREET, SUITE 220
PLEASANTON, CA 94566
(925) 855-0417

SHEET LIST TABLE

PROJECT LOCATION:

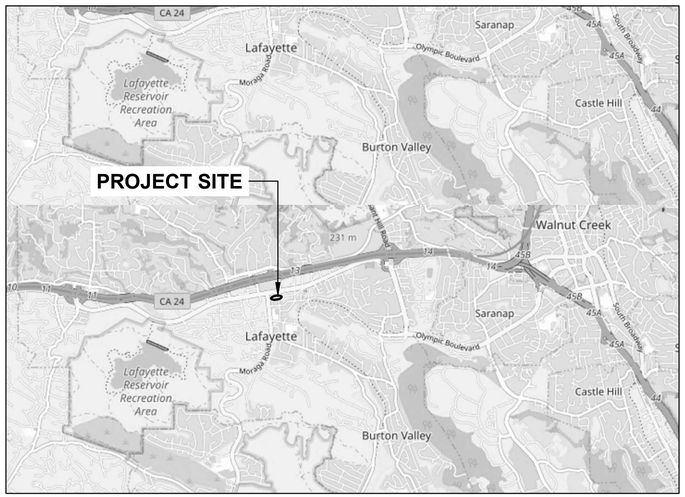

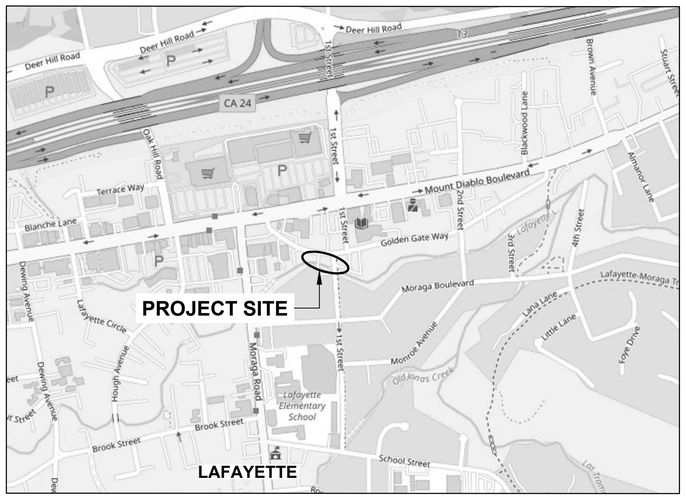

ABBREVIATIONS

AC	ASPHALT CONCRETE PAVEMENT
AB	AGGREGATE BASE
BSM	BIORETENTION SOIL MIX
CLR	CLEAR
CL	CENTERLINE
CONC	CONCRETE
DB	DUCT BANK
(E)	EXISTING
FG	FINISH GRADE
FS	FINISH SURFACE
GB	GRADE BREAK
HP	HIGH POINT
LP	LOW POINT
LF	LINEAR FEET
L.O.W.	LIMIT OF WORK
MM	MEET AND MATCH
N.I.C.	NOT IN CONTRACT
OC	ON CENTER
O.R.	OWNER'S REPRESENTATIVE
PP	PRESERVE AND PROTECT
R.O.W	RIGHT-OF-WAY
S.A.D.	SEE ARCHITECTURAL DRAWINGS
S.C.A.	SEE CIVIL DRAWINGS
STA	STATION
TBD	TO BE DETERMINED
TC	TOP OF CURB
TOB	TOP OF BERM
TOM	TOP OF MULCH
TTU	TO TOP OF UTILITY
TYP.	TYPICAL
UON	UNLESS OTHERWISE NOTED

811 CALL 811 BEFORE YOU DIG

2 WORKING DAYS BEFORE YOU DIG CALL USA TOLL FREE 811

APPROVED BY:
CITY OF LAFAYETTE

6/10/2022

JOHN M. LUTTROPP
ENGINEERING SERVICES MANAGER

DATE

REVISIONS

DATE	DESCRIPTION
----	----
----	----
----	----

PROJECT TITLE
FIRST STREET RAIN GARDEN
PROJECT #014-9722

SHEET TITLE
COVER

DESIGN PHASE
BID SET

RDG
Restoration Design Group, Inc.
2332 Fifth Street, Suite C
Berkeley, CA 94710
T 510.644.2798 F 510.644.2799
www.restorationdesigngroup.com

DESIGN BY	AS, MT
DRAWN BY	AS, MT, JH, NQ
CHECKED BY	ES, MT
SCALE	NTS
DATE	JUNE 2, 2022
SHEET	L-0.0

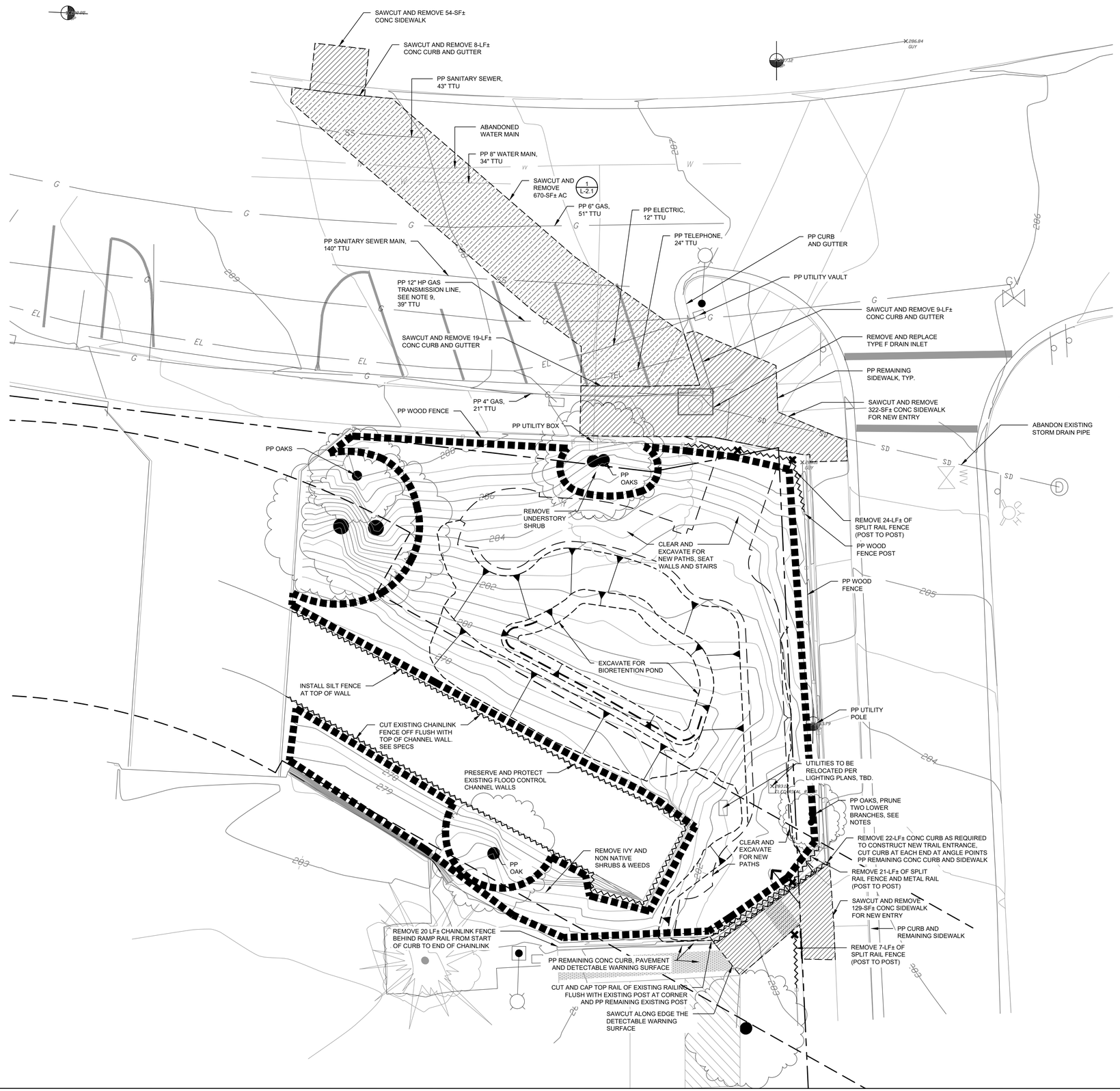

DEMOLITION LEGEND

- AREA TO BE CLEARED AND GRUBBED. SEE DEMOLITION NOTES.
- REMOVE CONC SIDEWALK AND CURB AND GUTTER, SEE NOTES ON PLAN.
- REMOVE ASPHALT PAVEMENT, SEE L-2.0
- AREA TO BE EXCAVATED, SEE L-2.0
- FENCING, GATES, AND CURBS TO BE REMOVED
- SAWCUT LINE
- CONSTRUCTION ACCESS
- FENCE POST TO BE REMOVED
- FLOOD CONTROL DISTRICT EASEMENT
- PROPERTY LINE

DEMOLITION NOTES

1. MAINTAIN PROJECT PERIMETER FENCE FOR THE DURATION OF THE CONSTRUCTION PERIOD.
2. REMOVE CONC SIDEWALK AND CURB AND GUTTER TO NEAREST EXPANSION JOINT AND SAWCUT ALONG JOINT TO PRESERVE AND PROTECT REMAINING CONC.
3. PROTECT ALL EXISTING TREES TO REMAIN.
4. PROTECT ALL IMPROVEMENTS NOT NOTED FOR DEMOLITION.
5. PP ALL UTILITIES UNLESS OTHERWISE NOTED.
6. LEGALLY DISPOSE OF ALL MATERIAL CLEARED, GRUBBED, DEMOLISHED, OR SALVAGED BUT NOT UTILIZED FOR PROJECT OR ACCEPTED BY OWNER. STOCKPILE ALL MATERIALS NOTED ON PLANS FOR REUSE.
7. SAWCUT TO NEAT STRAIGHT LINE FOR PAVEMENT REMOVAL AND RECUT ANY EDGES DAMAGED DURING CONSTRUCTION PRIOR TO RESTORING WITH NEW HMA.
8. CONTRACTOR IS RESPONSIBLE FOR FALL PROTECTION AND CONSTRUCTION SEQUENCING FOR WORKER SAFETY NEAR THE FLOOD CONTROL CHANNEL. SEE SPECIFICATIONS.
9. COORDINATE ANY EXCAVATION OR CONSTRUCTION ACTIVITIES WITHIN 10-FT OF 12-IN HIGH PRESSURE GAS TRANSMISSION LINE WITH PG&E.
10. DEMOLITION QUANTITIES ARE SHOWN FOR INFORMATIONAL PURPOSE ONLY AND ACTUAL QUANTITIES MAY VARY.
11. CLEAR AND GRUB FROM BACK OF CURB INTO PROJECT AREA. LINE LOCATED ON PLAN FOR GRAPHIC CLARITY. ALL INVASIVE WEEDS TO BE REMOVED FROM PROJECT AREA PRIOR TO COMMENCING LANDSCAPE IMPROVEMENTS.

EROSION CONTROL NOTES

1. PROVIDE STORM INLET PROTECTION MEASURES AT ALL DI'S WITHIN THE PROJECT SITE.
2. INSTALL FIBER ROLLS ON ALL EXPOSED SLOPES AT 5' OC SPACING.
3. CONTRACTOR TO PROVIDE SWPPP AND ENSURE COMPLIANCE THROUGHOUT THE DURATION OF CONSTRUCTION.

0 8 16 Feet

REVISIONS	
DATE	DESCRIPTION
----	----
----	----
----	----

PROJECT TITLE
FIRST STREET RAIN GARDEN
PROJECT #014-9722

SHEET TITLE
DEMOLITION AND EROSION CONTROL

DESIGN PHASE
BID SET

RDG
Restoration Design Group, Inc.
2332 Fifth Street, Suite C
Berkeley, CA 94710
T 510.644.2798 F 510.644.2799
www.restorationdesigngroup.com

LICENSED PROFESSIONAL ENGINEER MATTHEW J THOMAS C 79249 CIVIL STATE OF CALIFORNIA
EXP: 03-31-24 06-02-22

DESIGN BY	AS, MT
DRAWN BY	AS, MT, JH, NQ
CHECKED BY	ES, MT
SCALE	1" = 8'-0"
DATE	JUNE 2, 2022
SHEET	L-1.0

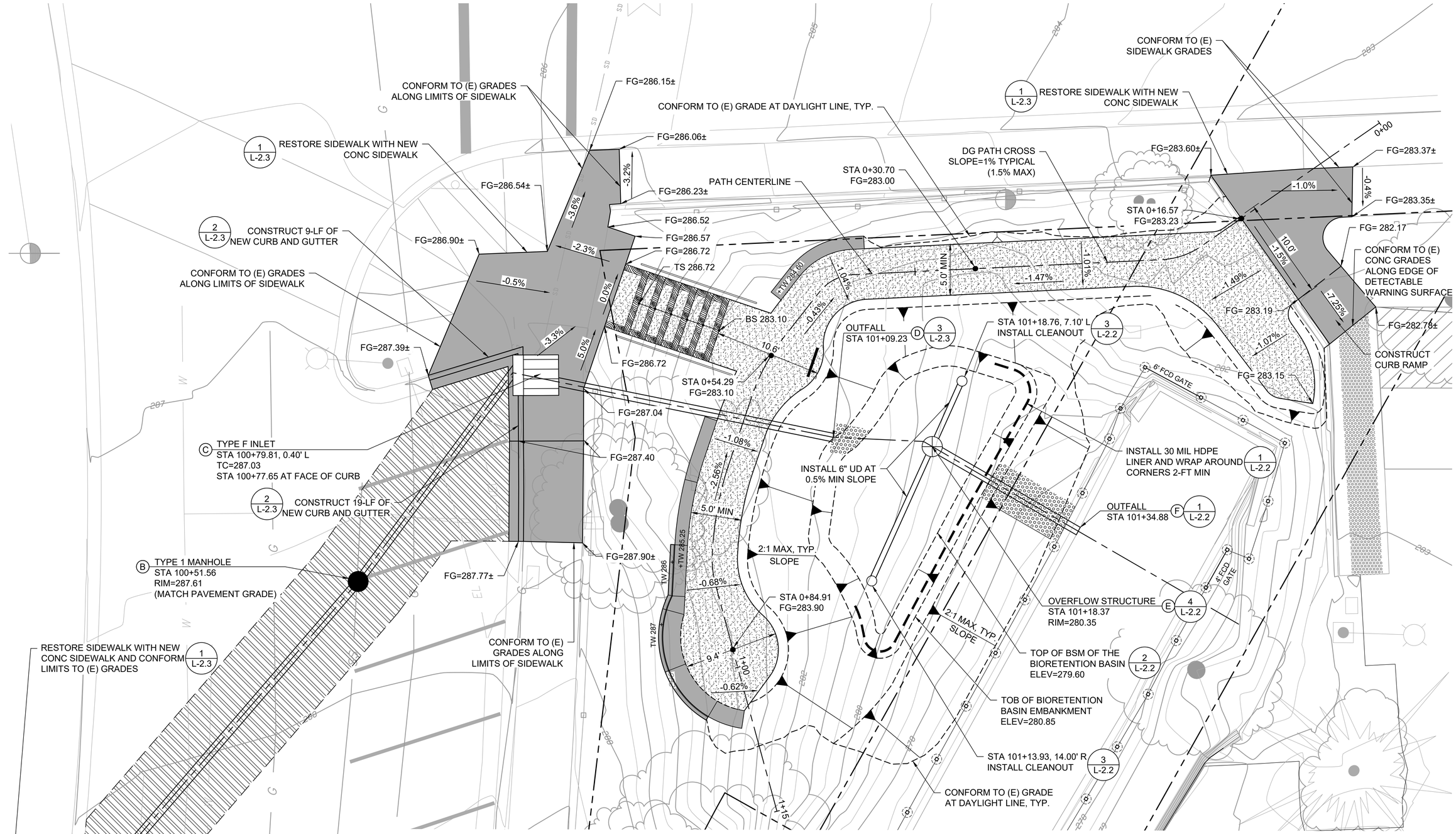

PLAN

0 5 10 Feet

GRADING & STORM DRAIN LEGEND

- (E) CONTOUR
- GRADE BREAK (TB, EC, BB)
- CONCRETE PAVING, PEDESTRIAN — 1 / L-2.3
- CONCRETE SEATWALL — -- / L-3.0
- STABILIZED DG PAVING — 1 / L-3.1
- VEHICULAR HMA
- VELOCITY DISSIPATOR (COBBLE OR RIPRAP)
- SLOPE SYMBOL

GENERAL NOTES

1. EXISTING UTILITY LOCATIONS AND INVERT ELEVATIONS ARE SHOWN AS APPROXIMATE AND CONTRACTOR MUST FIELD VERIFY AND NOTIFY CITY, OF ANY DISCREPANCIES.
2. RESTORE CONCRETE CURB, GUTTER AND SIDEWALK TO REMOVAL LIMITS AND CONFORM TO EXISTING GRADES AT A CONTINUOUS SLOPE UNLESS OTHERWISE NOTED.
3. STATION AND OFFSET FOR ALL DRAINAGE STRUCTURES ARE GIVEN TO THE CENTER OF THE BASE AND ARE BASED ON THE PIPE ALIGNMENT CENTERLINE. PIPE ALIGNMENT STATIONING STARTS AT 100+00 AS SHOWN.

REVISIONS

DATE	DESCRIPTION
----	----
----	----
----	----

PROJECT TITLE
FIRST STREET RAIN GARDEN
PROJECT #014-9722

SHEET TITLE
GRADING AND STORM DRAIN PLAN

DESIGN PHASE
BID SET

RDG
Restoration Design Group, Inc.
2332 Fifth Street, Suite C
Berkeley, CA 94710
T 510.644.2798 F 510.644.2799
www.restorationdesigngroup.com

LICENSED PROFESSIONAL ENGINEER MATTHEW J THOMAS C 79249 CIVIL STATE OF CALIFORNIA

EXP: 03-31-24 06-02-22

DESIGN BY	AS, MT
DRAWN BY	AS, MT, JH, NQ
CHECKED BY	ES, MT
SCALE	1" = 5'-0"
DATE	JUNE 2, 2022
SHEET	L-2.0

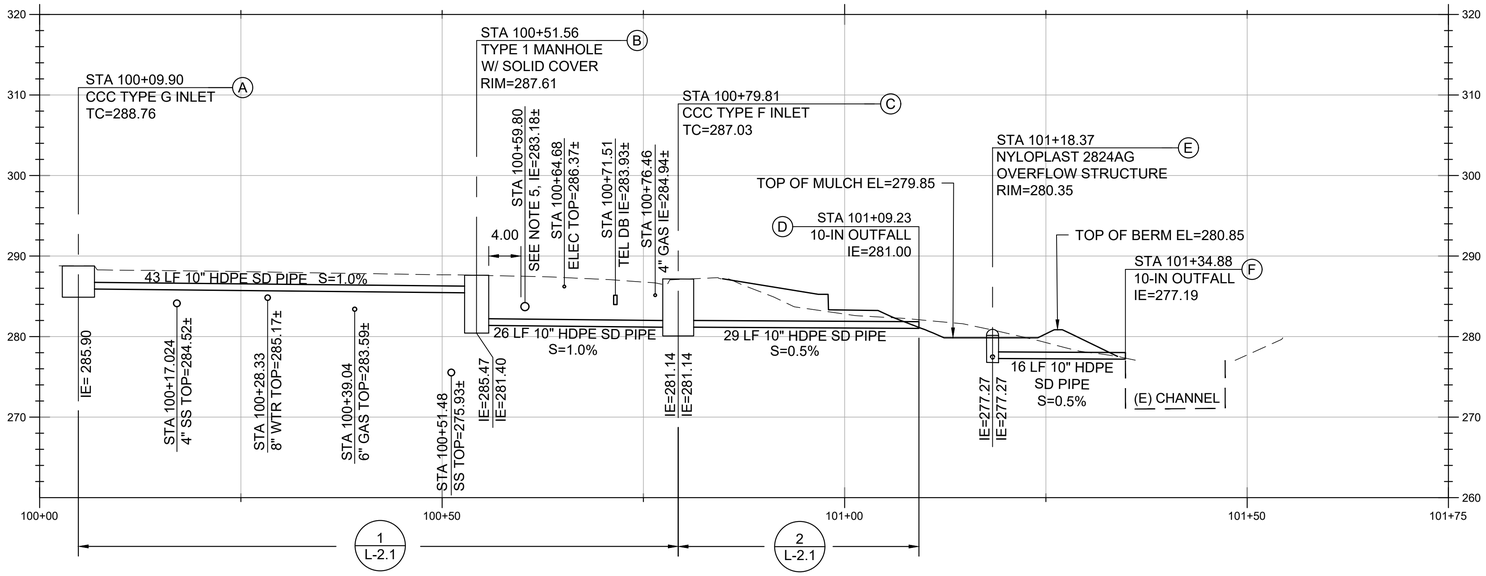

STORM DRAIN SYSTEM PROFILE

GENERAL NOTES

1. EXISTING UTILITY LOCATIONS AND INVERT ELEVATIONS ARE SHOWN AS APPROXIMATE AND CONTRACTOR TO FIELD VERIFY.
2. INVERT ELEVATIONS ARE GIVEN TO THE PROJECTED CENTERLINE OF THE DRAINAGE STRUCTURE.
3. RIM ELEVATIONS ARE GIVEN FOR THE LOWEST POINT ON THE RESPECTIVE GRATE OR CENTER OF SOLID LID.
4. SEE CONTRA COSTA COUNTY STANDARD PLAN CD25 FOR TYPE F INLET, CD27 FOR TYPE G INLET, AND CD30 FOR TYPE 1 MANHOLE BASE.
5. PG&E 12-IN HIGH PRESSURE GAS TRANSMISSION LINE

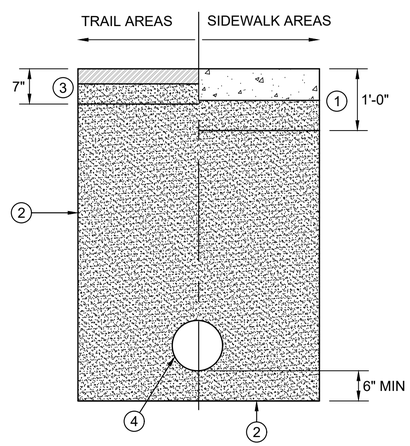

1. PLACE CONCRETE SIDEWALK. SEE DETAIL 1 ON SHEET L-2.3.
2. PLACE CLASS 2 AB COMPACTED TO 95% RELATIVE COMPACTION
3. PLACE DECOMPOSED GRANITE PAVING. SEE LAYOUT AND MATERIALS, L-3.0.
4. 10" HDPE SD PIPE

2 TYPICAL TRENCH SECTION

SCALE: NTS

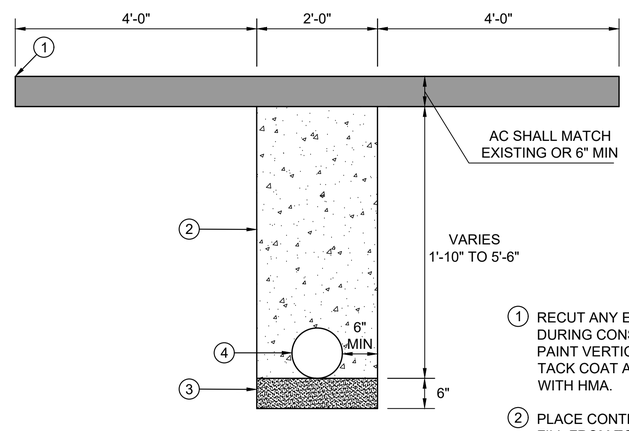

1. RECUT ANY EDGES DAMAGED DURING CONSTRUCTION AND PAINT VERTICAL EDGE WITH TACK COAT AND RESTORE WITH HMA.
2. PLACE CONTROLLED DENSITY FILL FROM TOP OF PIPE BEDDING TO BOTTOM OF HMA.
3. PLACE CLASS 2 AB FOR PIPE BEDDING COMPACTED TO 95%.
4. NEW 10" HDPE SD PIPE

1 TYPICAL TRENCH SECTION - GOLDEN GATE WAY

SCALE: NTS

REVISIONS	
DATE	DESCRIPTION
----	----
----	----
----	----

PROJECT TITLE
FIRST STREET RAIN GARDEN
PROJECT #014-9722

SHEET TITLE
STORM DRAIN AND TRAIL PROFILES

DESIGN PHASE
BID SET

Restoration Design Group, Inc.
2332 Fifth Street, Suite C
Berkeley, CA 94710
T 510.644.2798 F 510.644.2799
www.restorationdesigngroup.com

LICENSED PROFESSIONAL ENGINEER
MATTHEW J THOMAS
C 79249
CIVIL
STATE OF CALIFORNIA

EXP: 03-31-24	06-02-22
DESIGN BY	AS, MT
DRAWN BY	AS, MT, JH, NQ
CHECKED BY	ES, MT
SCALE	NTS
DATE	JUNE 2, 2022
SHEET	L-2.1

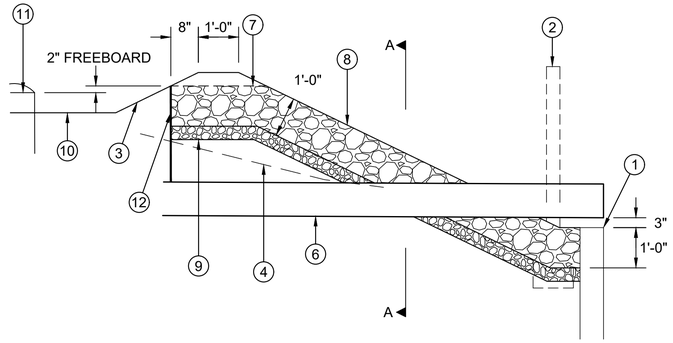

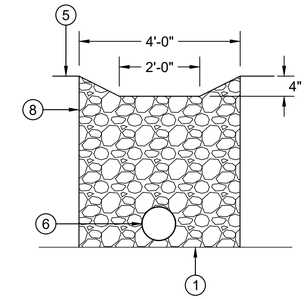

SECTION A-A

1. TOP OF (E) CHANNEL WALL.
2. NEW FENCE, SEE LANDSCAPE DETAILS.
3. BIORETENTION BASIN BANK.
4. (E) GRADE.
5. TOP OF BERM
6. NEW 10" HDPE SD PIPE
7. CONSTRUCT OVERFLOW NOTCH IN BERM WITH 2:1 MAX SIDE SLOPES CENTERED ALONG PIPE ALIGNMENT.
8. PLACE 3"-10" STREAMBED COBBLES WITH WIDTH OF 4' MIN CENTERED ALONG PIPE ALIGNMENT.
9. PLACE 4" CLASS 2 PERM
10. TOP OF MULCH FOR BIORETENTION BASIN
11. OVERFLOW STRUCTURE RIM
12. PLACE 30 MIL HDPE LINER VERTICALLY FROM TOP OF OUTLET PIPE TO GRADING SURFACE AS SHOWN. SEE GRADING AND DRAINAGE PLAN FOR EXTENTS.

1 BIORETENTION BERM OVERFLOW DETAIL

SCALE: NTS

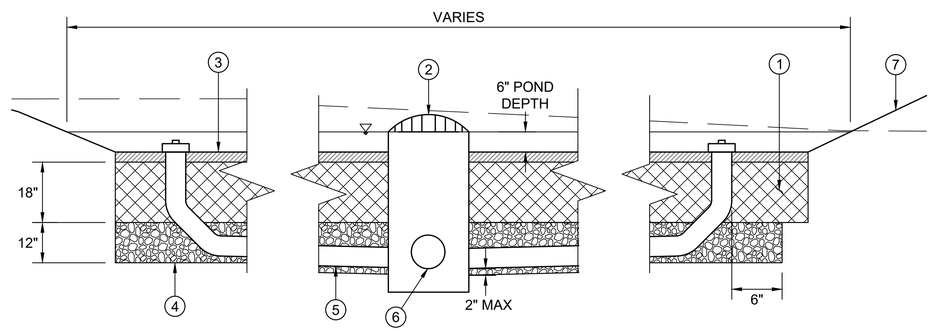

1. PLACE BIORETENTION SOIL PER CONTRA COSTA CLEAN WATER PROGRAM C3 GUIDEBOOK
2. OVERFLOW STRUCTURE
3. PLACE 3" MULCH AND GRADE LEVEL
4. PLACE CLASS 2 PERM AT 3' WIDTH CENTERED ON UNDERDRAIN PIPE
5. 6" UNDERDRAIN AT 0.5% MIN SLOPE
6. 10" OVERFLOW PIPE
7. SEE GRADING PLAN FOR BIORETENTION BANK GRADING

2 BIORETENTION POND

SCALE: NTS

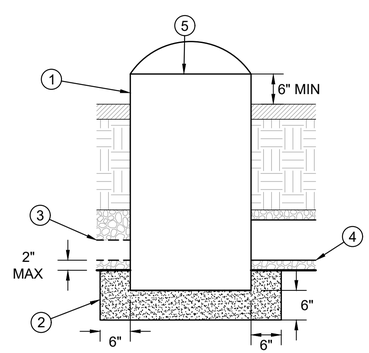

1. OVERFLOW STRUCTURE MUST BE NYLOPLAST™ 2824AG DRAINAGE BASIN WITH DOME GRATE AND ENVIROHOOD OR APPROVED EQUAL.
2. PLACE CLASS 2 AB COMPACTED TO 95% RELATIVE COMPACTION.
3. CONNECT SLOTTED 6" UD 2" MAX ABOVE BOTTOM OF ASTM NO. 7 LAYER TO DRAIN BASIN. IE ELEV SHOWN ON THE DRAINAGE SHEETS.
4. CONNECT 10" HDPE SD PIPE TO DRAIN BASIN. IE ELEV SHOWN ON THE DRAINAGE SHEETS.
5. RIM ELEV FOR OVERFLOW STRUCTURES SHOWN ON THE DRAINAGE SHEETS.

4 RAINGARDEN OVERFLOW STRUCTURE

SCALE: NTS

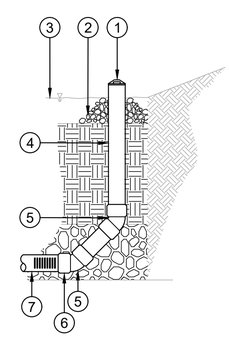

CLEANOUT

1. END PLUG OR CAP PER PIPE MANUFACTURER'S RECOMMENDATION. EXTEND CLEANOUT 2" MIN ABOVE DESIGN PONDING ELEVATION.
2. STREAMBED COBBLES
3. DESIGN PONDING ELEVATION
4. HDPE SDR-17 PIPE OR EQUAL. CLEANOUT PIPE AND FITTINGS SHALL BE SAME SIZE AND MATERIAL AS SLOTTED UNDERDRAIN PIPE.
5. INSTALL 45° BENDS
6. INSTALL COUPLER
7. INSTALL 6" SLOTTED UD PIPE

3 CLEANOUT

SCALE: NTS

REVISIONS

DATE	DESCRIPTION
----	----
----	----
----	----

PROJECT TITLE
FIRST STREET RAIN GARDEN
PROJECT #014-9722

SHEET TITLE
CIVIL DETAILS

DESIGN PHASE
BID SET

Restoration Design Group, Inc.
2332 Fifth Street, Suite C
Berkeley, CA 94710
T 510.644.2798 F 510.644.2799
www.restorationdesigngroup.com

LICENSED PROFESSIONAL ENGINEER
MATTHEW J THOMAS
C 79249
CIVIL
STATE OF CALIFORNIA

EXP: 03-31-24	06-02-22
DESIGN BY	AS, MT
DRAWN BY	AS, MT, JH, NQ
CHECKED BY	ES, MT
SCALE	VARIES
DATE	JUNE 2, 2022
SHEET	L-2.2

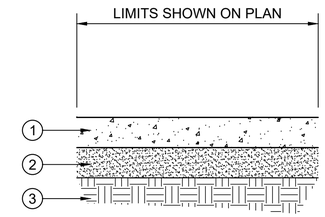

1. CONSTRUCT CONCRETE SIDEWALK. SEE CCC STD PLAN CA70. CONSTRUCT MONOLITHICALLY WHERE ADJACENT TO FULL SIDEWALK,
2. PLACE 6" MIN CLASS 2 AB COMPACTED TO 95% RELATIVE COMPACTION.
3. COMPACT SUBGRADE TO 95% RELATIVE COMPACTION.

1 SIDEWALK

SCALE: NTS

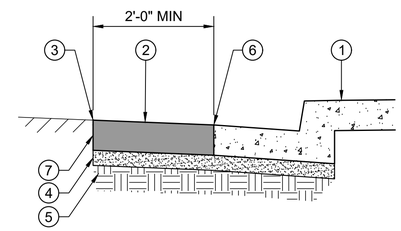

1. CONSTRUCT CONCRETE CCC TYPE S1-6 CURB AND GUTTER. SEE CCC STD PLAN CA71. CONSTRUCT MONOLITHICALLY WHERE ADJACENT TO FULL SIDEWALK, SEE CCC STD PLANS CA70.
2. RESTORE PAVEMENT WITH 6" MIN HMA, 2'-0" MIN FROM EDGE OF NEW GUTTER.
3. SAWCUT (E) AC TO A NEAT STRAIGHT LINE 2'-0" MIN FROM EDGE OF NEW GUTTER OR AS SHOWN ON DEMOLITION PLAN. RE-CUT ANY EDGES DAMAGED DURING CONSTRUCTION.
4. PLACE 6" MIN CLASS 2 AB COMPACTED TO 95% RELATIVE COMPACTION.
5. FILL WITH CLASS II AB COMPACTED TO 95% RELATIVE COMPACTION AS REQUIRED TO BUILD UP GRADE AND COMPACT SUBGRADE.
6. SEE CCC STD PLAN CA70 FOR GUTTER LIP PAVING DETAIL.
7. PAINT BINDER (TACK COAT) TO ALL VERTICAL SURFACES PRIOR TO PLACEMENT OF NEW HMA.

2 CURB AND GUTTER

SCALE: NTS

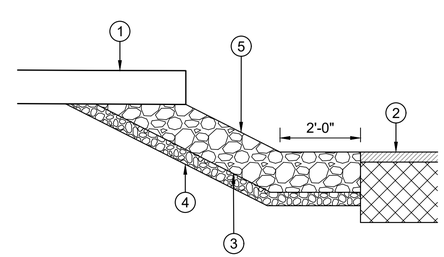

1. 10" HDPE SD PIPE
2. TOP OF MULCH OF BIORETENTION BASIN
3. PLACE 12" OF 3"-10" STREAMBED COBBLES WITH WIDTH OF 3' MIN CENTERED ALONG PIPE ALIGNMENT.
4. PLACE 4" OF CLASS 2 PERM WITH WIDTH OF 3' MIN CENTERED ALONG PIPE ALIGNMENT.
5. SEE GRADING PLAN FOR BIORETENTION BANK GRADING.

3 OUTFALL TO BIORETENTION BASIN DETAIL

SCALE: 1/2" = 1'

REVISIONS

DATE	DESCRIPTION
----	----
----	----
----	----

PROJECT TITLE

FIRST STREET RAIN GARDEN

PROJECT #014-9722

SHEET TITLE

CIVIL DETAILS CONT.

DESIGN PHASE

BID SET

Restoration Design Group, Inc.
2332 Fifth Street, Suite C
Berkeley, CA 94710
T 510.644.2798 F 510.644.2799
www.restorationdesigngroup.com

LICENSED PROFESSIONAL ENGINEER
MATTHEW J THOMAS
C 79249
CIVIL
STATE OF CALIFORNIA

EXP: 03-31-24 06-02-22

DESIGN BY	AS, MT
DRAWN BY	AS, MT, JH, NQ
CHECKED BY	ES, MT
SCALE	VARIES
DATE	JUNE 2, 2022
SHEET	L-2.3

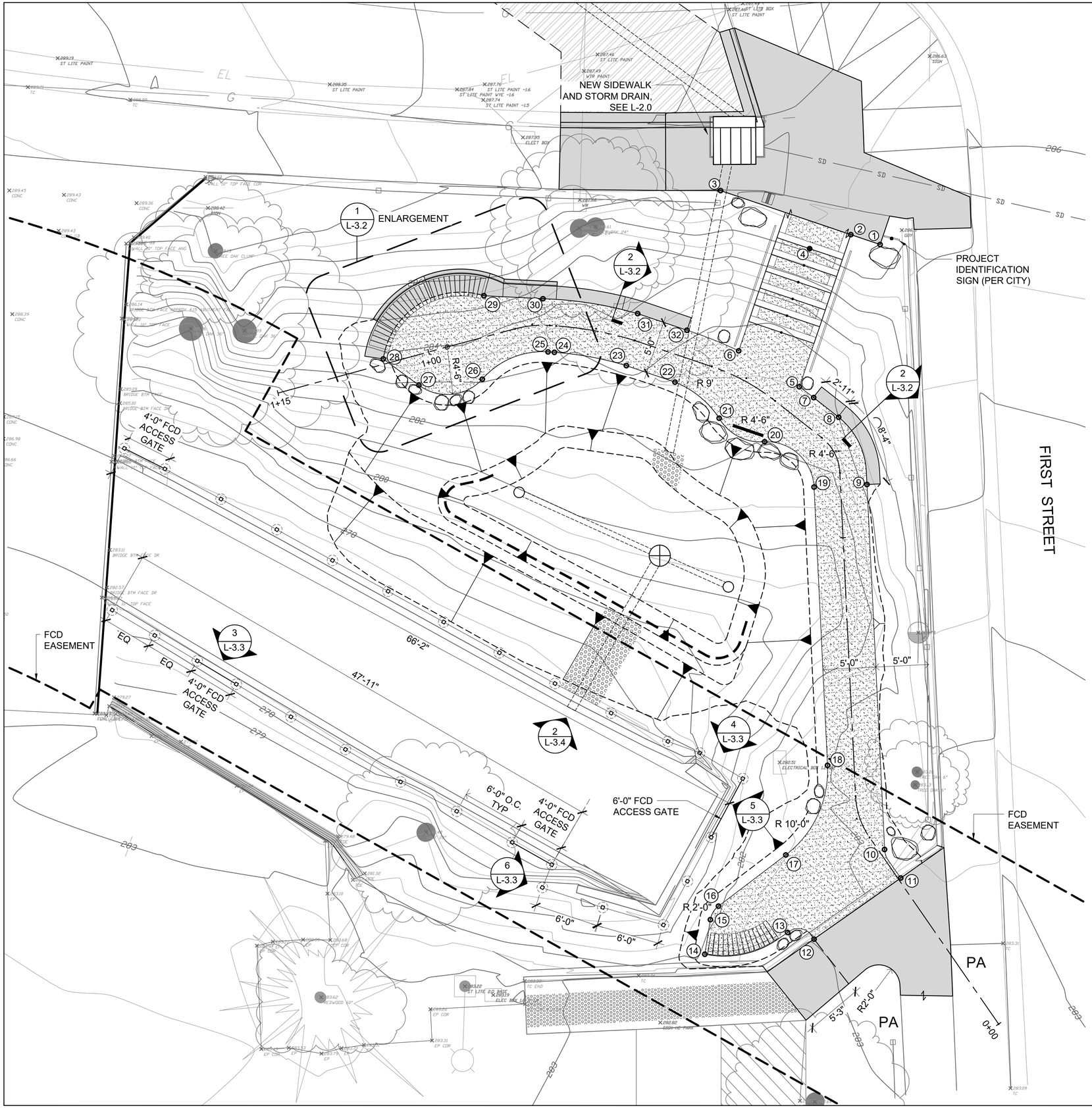

LAYOUT NOTES

1. PROVIDE SHOP DRAWINGS AND AS-BUILTS AS NOTED IN SPECIFICATIONS.
2. CONTRACTOR SHALL VERIFY ALL EXISTING CONDITIONS ON THE SITE AND NOTIFY CITY OF ALL DISCREPANCIES. CONTRACTOR SHALL BE RESPONSIBLE FOR PROVIDING MINOR SITE ADJUSTMENTS TO GRADING, ALIGNMENT, AND LAYOUT TO PROPOSED SITE IMPROVEMENTS AT NO COST TO THE CITY.
3. DIMENSIONS AS SHOWN ARE TO BE VERIFIED WITH THE CITY PRIOR TO INSTALLING THE IMPROVEMENTS. IF MINOR FIELD ADJUSTMENTS ARE REQUIRED, THEY SHALL BE COMPLETED BY THE CONTRACTOR AT NO COST TO THE CITY.
4. SEE CIVIL PLANS FOR ALL RIGHT OF WAY AND STORMWATER COMPONENTS.

LAYOUT & MATERIALS LEGEND

- FCD ACCESS EASEMENT
- (E) CONTOUR
- (N) WOOD AND WIRE FENCE — 1 / L-3.3
- GRADE BREAK (TB, EC, BB)
- SITE BOULDER, LAYOUT BY O.R. — 2 / L-3.1
- TIMBER BOX STEPS — 5 / L-3.1
- TREAD MARKER
- HANDRAIL — 4 / L-3.1
- INTERPRETIVE PANEL (POTENTIAL LOCATION)
- CREEK ICON (SEE SPECS)
- DECOMPOSED GRANITE — 1 / L-3.1
- CONCRETE PAVING, PEDESTRIAN — 1 / L-2.3
- VELOCITY DISSIPATOR (COBBLE OR RIPRAP)
- BENCH W/ BACK — 4 / L-3.2

LAYOUT POINTS TABLE

Point Table

Point #	Station	Offset	Description
1	0+66.31	17.75	CORNER OF PAVING
2	0+67.81	16.98	TOP OF STAIRS
3	0+76.95	16.00	CORNER OF PAVING
4	0+69.35	13.90	TOP OF TREAD
5	0+64.61	2.46	CORNER OF PATH EDGE
6	0+70.68	2.30	CORNER OF PATH EDGE
7	0+62.92	2.50	START OF SEATWALL
8	0+59.94	2.50	START OF CURVE
9	0+54.91	2.50	END OF SEATWALL
10	0+19.67	0.52	START OF CURVE
11	0+16.59	0.24	EDGE OF PAVING
12	0+16.51	−9.77	EDGE OF PAVING
13	0+18.43	−11.46	END OF CURVE AT PATH
14	0+21.19	−19.06	CORNER OF PAVING
15	0+22.08	−16.86	START OF CURVE AT PATH EDGE
16	0+22.32	−15.58	END OF CURVE AT PATH EDGE
17	0+22.97	−7.77	START OF CURVE AT PATH EDGE
18	0+28.61	−2.51	END OF CURVE AT PATH EDGE
19	0+54.91	−2.50	START OF CURVE AT PATH EDGE
20	0+63.98	−3.63	CURVE TANGENT

Point Table

Point #	Station	Offset	Description
21	0+69.59	−4.23	CURVE TANGENT
22	0+75.24	−2.50	END OF CURVE
23	0+80.08	−2.50	CURVE TANGENT
24	0+87.64	−2.50	END OF CURVE
25	0+88.24	−2.50	START OF CURVE
26	0+95.77	−3.80	END OF CURVE
27	1+01.71	−2.79	END OF CURVE
28	1+04.30	0.49	START OF SEATWALL
29	0+93.59	3.77	END OF CURVE
30	0+88.91	2.50	START OF CURVE
31	0+80.54	2.51	START OF CURVE
32	0+75.73	2.50	END OF SEATWALL

0 5 10 Feet

REVISIONS

DATE	DESCRIPTION
----	----
----	----
----	----

PROJECT TITLE
FIRST STREET RAIN GARDEN
PROJECT #014-9722

DESIGN PHASE
BID SET

SHEET TITLE
LAYOUT AND MATERIALS

RDG
Restoration Design Group, Inc.
2332 Fifth Street, Suite C
Berkeley, CA 94710
T 510.644.2798 F 510.644.2799
www.restorationdesigngroup.com

LICENSED LANDSCAPE ARCHITECT
ERIK STROMBERG #5538
STATE OF CALIFORNIA
02/01/22
RENEWAL DATE
DATE

DESIGN BY	AS, MT
DRAWN BY	AS, MT, JH, NQ
CHECKED BY	ES, MT
SCALE	1" = 5'-0"
DATE	JUNE 2, 2022
SHEET	L-3.0

----

1. TIMBER BOX STEP (5 / L-3.1)
2. HANDRAIL, 1-1/2" STD. STEEL PIPE, (1-7/8" OD) FULLY WELDED AND JOINTS GROUND SMOOTH. POWDER COAT BLACK, SEE SPECS. SET CENTER POST FOOTING CENTERED ON TREAD PER O.R. DIRECTION. EMBED POST 24" INTO FOOTING, TYP. SEE SPECS FOR FINISH.
3. CONCRETE FOOTING, 12" DIAMETER, 30" DEPTH INTO FIRM NATURAL GRADE OR COMPACTED SUBGRADE. SET TOP 2" BELOW FINISH GRADE, MIN.
4. COMPACTED SUBGRADE, BENCH TO ACCEPT STAIRS.
5. TOP LANDING, CONCRETE SIDEWALK. SEE DETAIL (1 / L-2.3) HOLD FLUSH TO ADJACENT FINISH GRADE.
6. BOTTOM LANDING, AGGREGATE PAVING. SEE DETAIL (1 / L-3.1) HOLD FLUSH TO ADJACENT FINISH GRADE.
7. SITE BOULDERS BEYOND, SEE DETAIL (2 / L-3.1) PLACE PER O.R. DIRECTION PRIOR TO INSTALLING TREAD AGGREGATE PAVING.

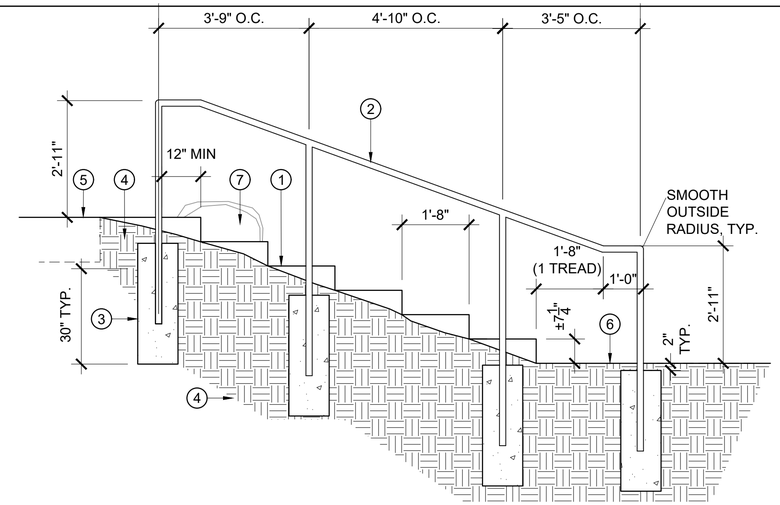

4 HANDRAIL
SCALE: NTS

1. 3/8"-1/4" DECOMPOSED GRANITE (DG) PAVING, 3" DEPTH.
2. CLASS 2 AB COMPACTED TO 95% RELATIVE COMPACTION, 4" DEPTH, EXTEND BEYOND EDGE AS SHOWN.
3. SUBGRADE, COMPACTED TO 95% RC. SHAPE TO DRAIN PER PLANS.
4. STEEL HEADER, 6" DEPTH. SEE DETAIL (3 / L-3.1)
5. 3" DEEP EARTHEN SHOULDER, OVER 4" DEEP BASE COURSE. COMPACT TO 90%.

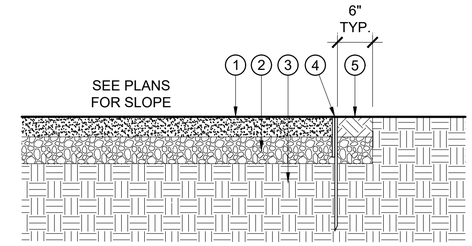

NOTES:
A. INSTALLATION TO BE COMPLETED IN ACCORDANCE WITH MANUFACTURER'S SPECIFICATIONS
B. FOR STABILIER AND COLOR, SEE SPECIFICATIONS

1 STABILIZED DG PAVING
SCALE: NTS

1. REBAR, (3) #6 AT EACH TREAD AND (1) AT EACH SIDE TIMBER. 48" LENGTH, FLUSH TO TOP OF TIMBER. PREDRILL HOLES FOR TIGHT FIT. DRIVE THROUGH TIMBERS BELOW AND INTO SOIL UNTIL TOP IS FLUSH WITH TIMBER. (2) #6 AT LANDINGS AS SHOWN.
2. 8X8 GROUND CONTACT RATED PRESSURE TREATED DOUGLAS FIR. LENGTHS AS NOTED.
3. BACKFILL AND COMPACT DG PAVING SURFACING MATERIAL SPECIFIED FOR LANDINGS
4. (4) 1/2"Ø X 12" LONG HOT-DIP GALV. STEEL LAG BOLTS WITH WASHERS, TYP. EACH END. PRE-DRILL CLEARANCE HOLES AND PILOT HOLES AS REQ'D TO AVOID SPLITTING WOOD. ALSO COUNTER-SINK SO WASHER AND HEX HEAD ARE SLIGHTLY RECESSED.
5. BOTTOM LANDING, DG PAVING. HOLD FLUSH TO ADJACENT FINISH GRADE.
6. BACKFILL SLOPE AGAINST STEPS, COMPACT AND MATCH ADJACENT GRADES
7. 1-1/2" TO 2" CROWN, TYP., MIDDLE OF DG LANDING.
8. TOP LANDING, CONCRETE SIDEWALK. SEE DETAIL (1 / L-2.3) CUT TIMBERS TO MEET CONCRETE. HOLD FLUSH TO ADJACENT FINISH GRADE.

NOTES:
A. PREPARE ALL SUBGRADE SURFACES PRIOR TO DRILLING TIMBERS FOR REBAR TO ALLOW FOR SUBGRADE OBSTRUCTIONS SUCH AS ROCKS. COMPACT ALL SUBGRADE SURFACES TO RECEIVE TIMBERS.
B. SUBGRADE FOR EACH BOX STEP SHALL BE COMPACTED PRIOR TO PLACEMENT OF NEXT BOX STEP. COMPACT SUBRADE TO 95% MIN., INSTALL DG SURFACING PER DETAL 1/L-3.1
C. FINAL LAYOUT TO BE APPROVED BY CITY.
D. HANDRAIL NOT SHOWN FOR GRAPHIC CLARITY. SEE DETAIL 4 THIS SHEET AND PLANS FOR HANDRAIL INFORMATION.

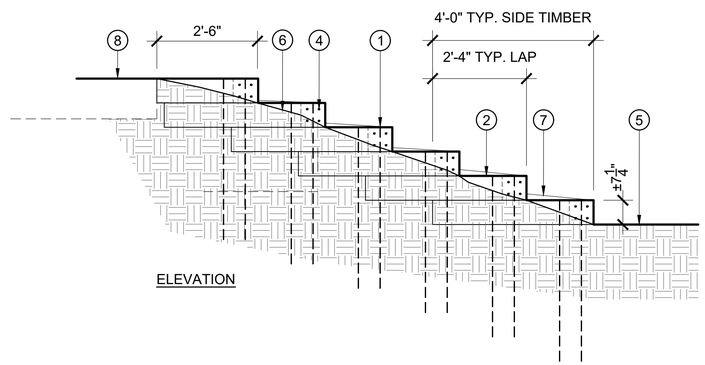

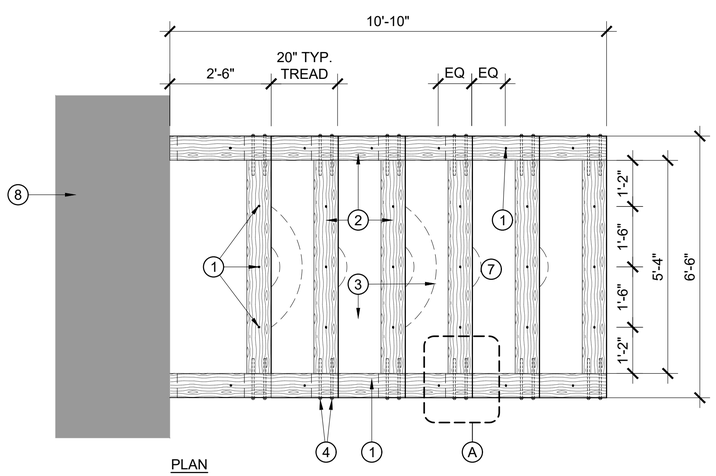

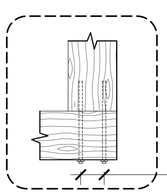

A 2X ENLARGEMENT TYPICAL STEEL LAG BOLTS

SET 4 SCREWS IN 3-1/2"x3-1/2" SQUARE PATTERN

5 TIMBER BOX STEP
SCALE: NTS

1. BOULDER, SET ON COMPACTED SUBGRADE, SET BOULDER BETWEEN 1/2 AND 3/4 INTO GRADE PER O.R. DIRECTION
2. FINISH GRADE (PLANTING AREA)
3. COMPACT SUBGRADE TO 90% RELATIVE COMPACTION
4. STEEL HEADER, SEE DETAIL (3 / L-3.1)
5. ADJACENT TRAIL

NOTE: GRADE / SLOPES VARY, SEE PLANS

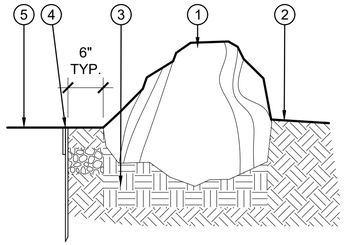

2 SITE BOULDER
SCALE: NTS

1. 3/8" STEEL HEADER, 6" DEPTH, IN MIN. 20-FT SECTIONS. SEE SPECIFICATIONS
2. 1-1/2" x 3/8" FLAT BAR STEEL STAKE, 18" OR AS PROVIDED BY HEADER MANUFACTURER. SEE SPECIFICATIONS
3. BASE COURSE, 4" DEPTH, EXTEND BEYOND EDGE AS SHOWN IN DETAIL 1, THIS SHEET.
4. EARTHEN SHOULDER, OVER BASE COURSE. COMPACT TO 90% TO SUPPORT HEADER.
5. PLANTING AREA, SEE PLANS

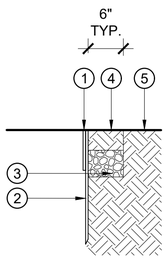

3 STEEL HEADER
SCALE: NTS

REVISIONS	
DATE	DESCRIPTION
----	----
----	----
----	----

PROJECT TITLE
FIRST STREET RAIN GARDEN
PROJECT #014-9722

SHEET TITLE
LANDSCAPE DETAILS

DESIGN PHASE
BID SET

RDG
Restoration Design Group, Inc.
2332 Fifth Street, Suite C
Berkeley, CA 94710
T 510.644.2798 F 510.644.2799
www.restorationdesigngroup.com

LICENSED LANDSCAPE ARCHITECT ERIK STROMBERG #5538 STATE OF CALIFORNIA
SIGNATURE
07/21/22
REGISTRATION DATE
DATE

DESIGN BY	AS, MT
DRAWN BY	AS, MT, JH, NQ
CHECKED BY	ES, MT
SCALE	AS NOTED
DATE	JUNE 2, 2022
SHEET	L-3.1

CONCRETE SEATWALL CALLOUTS (WHOLE SHEET)

1. CONCRETE SEATWALL, SLOPE SEAT 1% TO DRAIN.
2. COMPACTED SUBGRADE, SEE SPECS.
3. DECOMPOSED GRANITE (DG) PAVING. (1 / L-3.1)
4. TOP OF WALL HELD LEVEL. SEE GRADING PLANS.
5. #4 REBAR, SHAPED AS SHOWN, SPACED AT 12" O.C.
6. #4 REBAR, RUN CONTINUOUS WHERE SHOWN WITH DOTS
7. WALL-MOUNTED CURVED BENCH. SEE SPECS.
8. 6" OF CLASS 2 AB COMPACTED TO 95%
9. CONSTRUCT COLD JOINT

NOTES:

A. ALL EDGES AND CORNERS TO BE 1" TOOLED RADIUS, TYP.
B. BENCH ANCHORS PROVIDED BY MANUFACTURER. SEE SPECS FOR INSTALLATION INSTRUCTIONS FOR WOOD SEATS
C. COLD JOINT LOCATIONS FOR SECOND SEATWALL ARE MARKED ON LAYOUT PLANS.

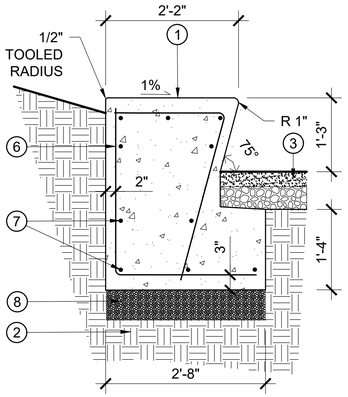

5 SEATWALL - WIDE BACKLESS
SCALE: NTS

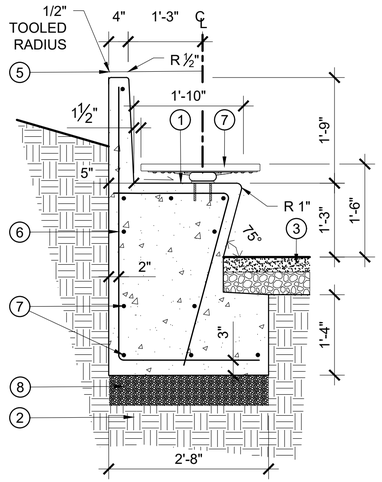

4 SEATWALL - WITH BENCH
SCALE: NTS

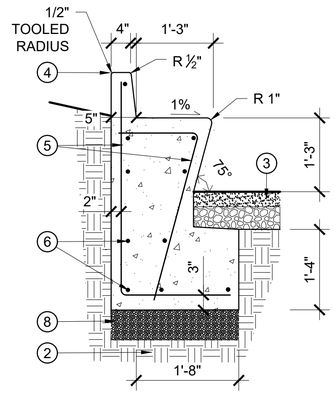

3 SEATWALL - WITH SHORT BACK
SCALE: NTS

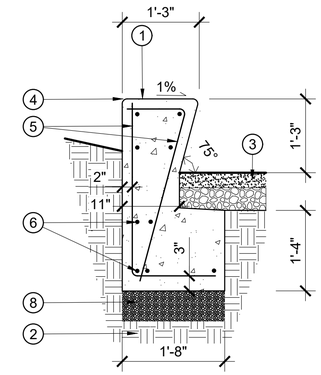

2 SEATWALL - BACKLESS
SCALE: NTS

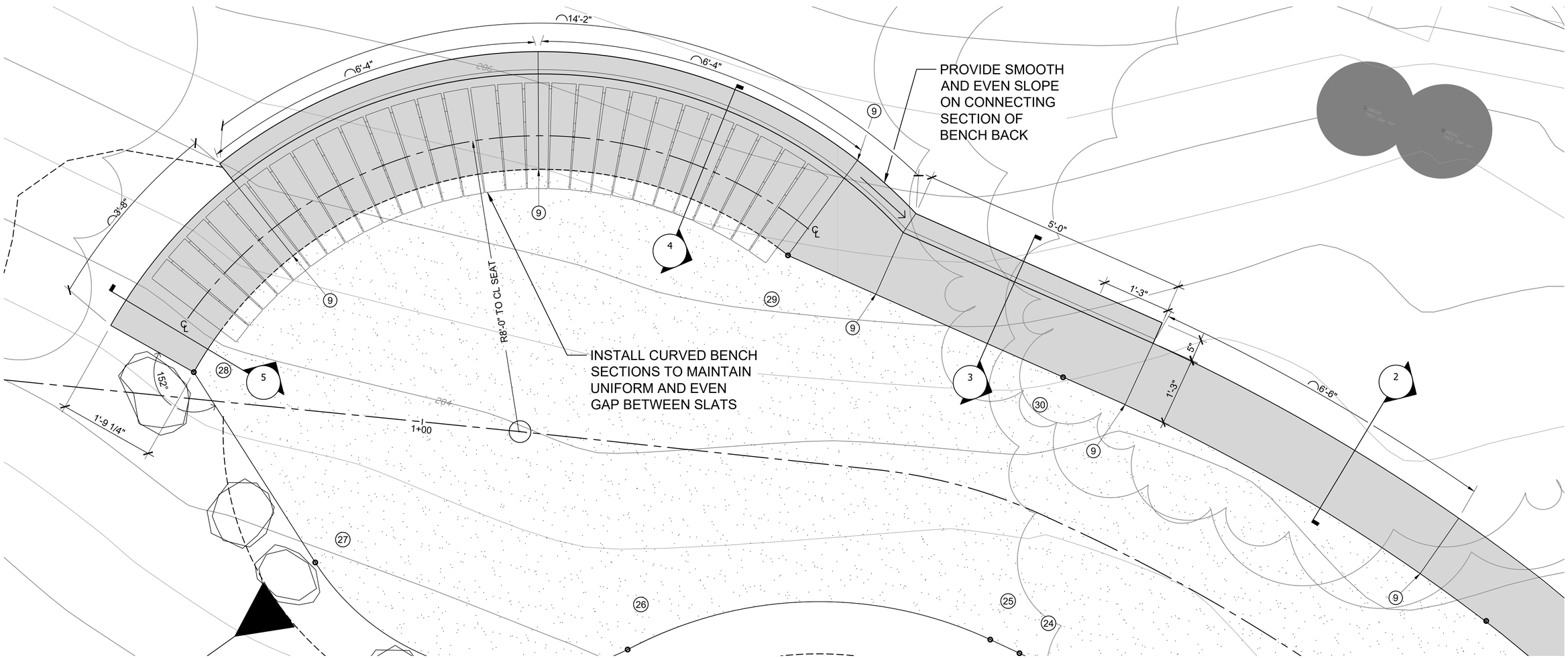

1 CONCRETE SEATWALL - PLAN ENLARGEMENT
SCALE: 1" = 1'-0"

REVISIONS	
DATE	DESCRIPTION
----	----
----	----
----	----

PROJECT TITLE
FIRST STREET RAIN GARDEN
PROJECT #014-9722

SHEET TITLE
LANDSCAPE DETAILS

DESIGN PHASE
BID SET

Restoration Design Group, Inc.
2332 Fifth Street, Suite C
Berkeley, CA 94710
T 510.644.2798 F 510.644.2799
www.restorationdesigngroup.com

STATE OF CALIFORNIA · LICENSED LANDSCAPE ARCHITECT · ERIK STROMBERG #4359
SIGNATURE
03/31/23
RENEWAL DATE
DATE

DESIGN BY	AS, MT
DRAWN BY	AS, MT, JH, NQ
CHECKED BY	ES, MT
SCALE	AS NOTED
DATE	JUNE 2, 2022
SHEET	L-3.2

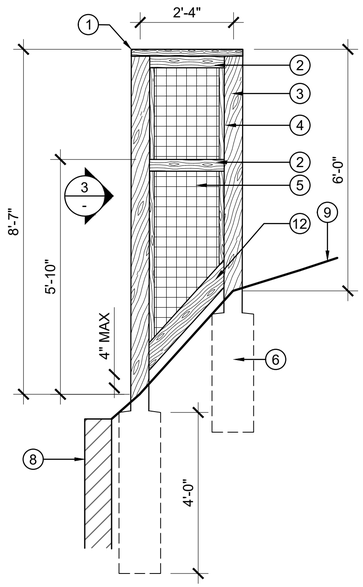

6 GUARDRAIL SECTION - STEEP SLOPE

SCALE: 1/2" = 1'-0"

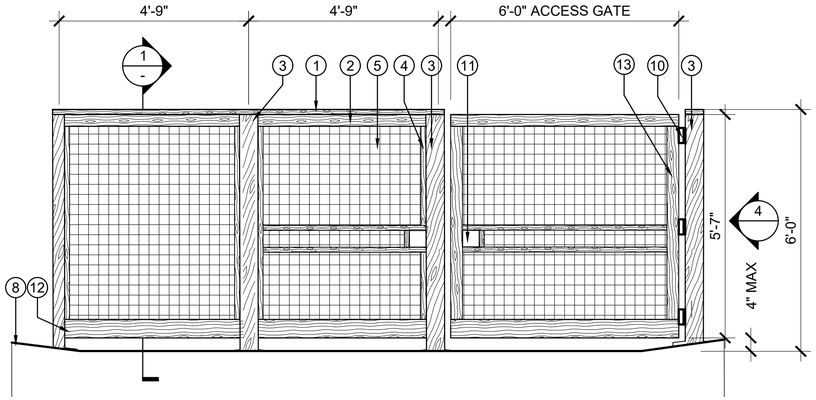

5 WOOD AND WIRE FENCE - FIRST ST ELEVATION

SCALE: 1/2" = 1'-0"

FENCE AND GUARDRAIL CALLOUTS (WHOLE SHEET)

1. 2X6 CAP, SCREW DOWN INTO TOP OF EACH 6X6 POSTS WITH 4 STRUCTURAL WOOD SCREWS.
2. 2X4 HORIZONTAL STRINGERS, SANDWICH METAL MESH
3. 6X6 PRESSURE TREATED DOUGLAS FIR BROWN POSTS, 6' O.C. UNLESS OTHERWISE NOTED
4. 2X2 VERTICAL CLOSURE PIECE, SANDWICH METAL MESH. SECURE TO POST WITH STRUCTURAL WOOD SCREWS AT 12" O.C.
5. WELDED WIRE MESH: MCNICHOLS VINYL-COATED BLACK 2"X2"X0.192". INSTALL IN SINGLE FULL-SIZE PIECES FOR EACH PANEL. SECURE BY SANDWICHING BETWEEN STRINGERS AND CLOSURE PIECES.
6. 12" Ø FOOTING, 3'-0" TYP. DEPTH FOR COMMON FENCE POSTS, 4'-0" DEPTH FOR HINGE AND LATCH POSTS. SLIGHTLY SLOPE TOP TO DRAIN AWAY FROM POST.
7. SUBGRADE
8. EXISTING CONCRETE CHANNEL WALL
9. EXISTING GRADE
10. 4.5" HEAVY DUTY STAINLESS STEEL SPRING BUTT HINGE, OUTDOOR RATED, 3 PER GATE
11. 5" X 5" CHAIN AND LOCK CUTOUTS PER NOTE 7 SHEET CD70. 2X2 VERTICAL AND HORIZONTAL WOOD PIECES, ALL MUST BE FLUSH AND SANDED.
12. 2X6 HORIZONTAL STRINGERS, SANDWICH METAL MESH
13. 2X4 VERTICAL CLOSURE PIECES AT GATES. SANDWICH METAL MESH

NOTES:

A. ALL FASTENERS TO BE STAINLESS STEEL OR HDG
B. ALL FASTENERS TO BE SCREWS OR BOLTS, NO NAILS, COUNTERSUNK FLUSH. AESTHETICS ARE IMPORTANT AND CONTRACTOR SHALL CAREFULLY ALIGN AND EVENLY SPACE ALL FASTENERS.
C. STRUCTURAL WOOD SCREWS SHALL BE GRK-R4-#10X3-1/2 UNLESS OTHERWISE NOTED.
D. ALL WOOD COMPONENTS EXCLUDING POSTS TO BE REDWOOD, CONSTRUCTION HEART OR BETTER.
E. SAND (220 GRIT) AND SEAL (CABOT'S CLEAR COAT) ALL EXPOSED WOOD.

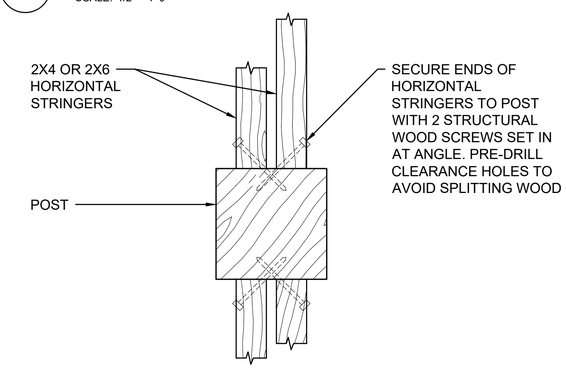

2 PLAN DETAIL

SCALE: 3" = 1'-0"

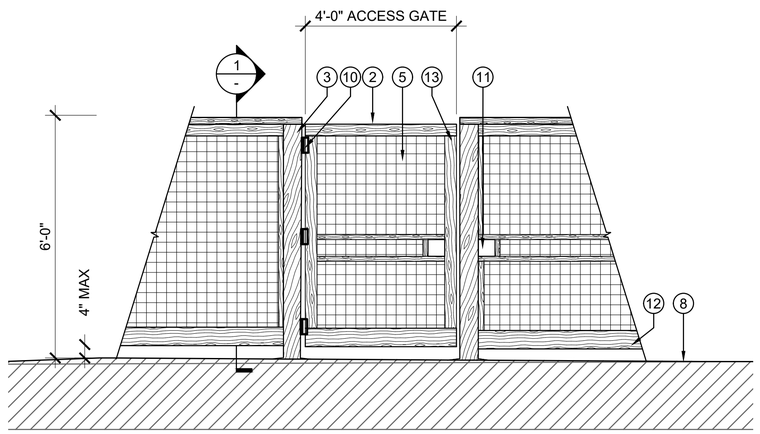

3 FCD ACCESS GATE - TYP. INTERIOR VIEW

SCALE: 1/2" = 1'-0"

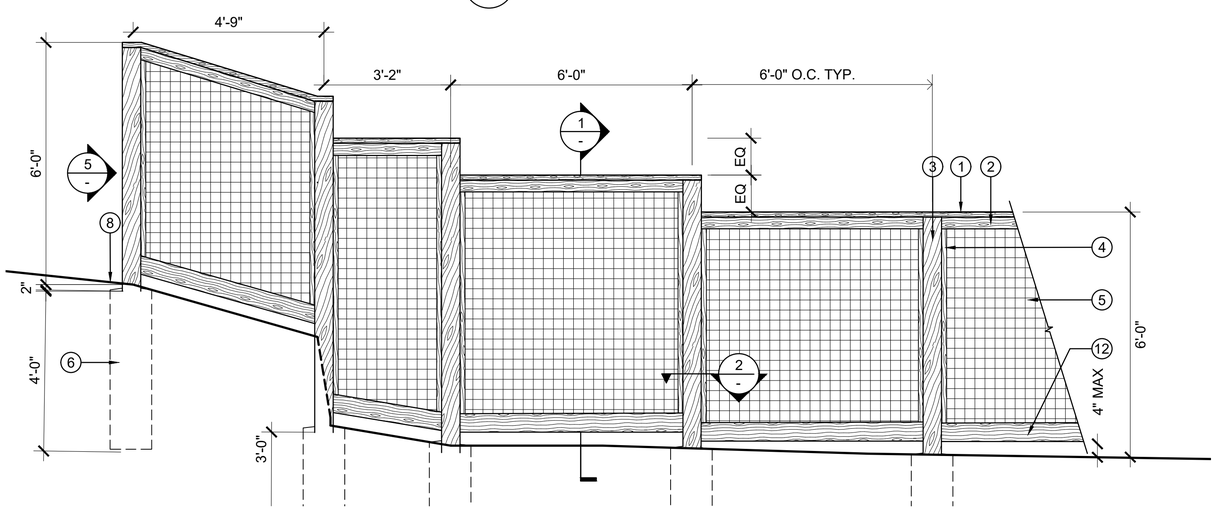

4 WOOD AND WIRE FENCE - NORTH SIDE ELEVATION

SCALE: 1/2" = 1'-0"

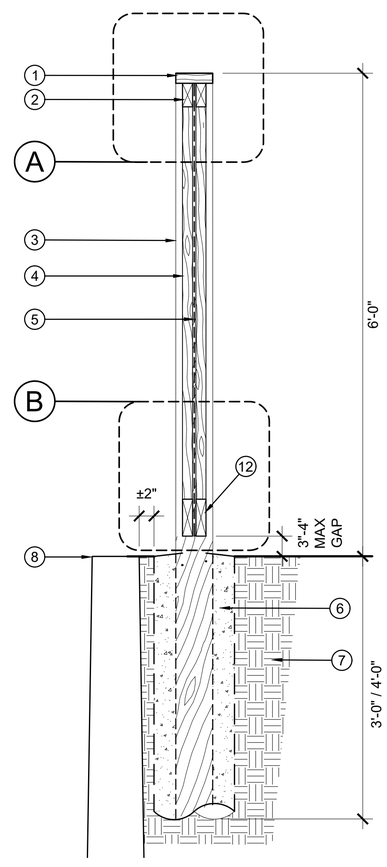

1 WOOD AND WIRE FENCE SECTION

SCALE: 1" = 1'-0"

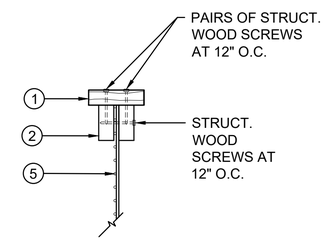

A ENLARGEMENT
SCALE: 1-1/2" = 1'-0"

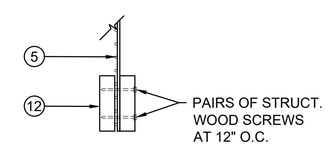

B ENLARGEMENT
SCALE: 1-1/2" = 1'-0"

REVISIONS	
DATE	DESCRIPTION
----	----
----	----
----	----

PROJECT TITLE

FIRST STREET RAIN GARDEN
PROJECT #014-9722

SHEET TITLE

LANDSCAPE DETAILS

DESIGN PHASE

BID SET

RDG
Restoration Design Group, Inc.
2332 Fifth Street, Suite C
Berkeley, CA 94710
T 510.644.2798 F 510.644.2799
www.restorationdesigngroup.com

LICENSED LANDSCAPE ARCHITECT
ERIK STROMBERG #5539
STATE OF CALIFORNIA
SIGNATURE
05/31/22
EXPIRATION DATE
DATE

DESIGN BY	AS, MT
DRAWN BY	AS, MT, JH, NQ
CHECKED BY	ES, MT
SCALE	AS NOTED
DATE	JUNE 2, 2022
SHEET	L-3.3

1. METAL LEGS
2. 9" THICK CONCRETE FOOTING/SLAB
3. #4 REBAR: @ 18" O.C. BOTH WAYS AT CENTER OF CONCRETE SLAB, PLUS 2 AROUND ALL EDGES
4. 6" CLASS 2 AGGREGATE BASE ROCK, COMPACTED TO 95%

NOTES:
A. BENCH ANCHORS PROVIDED BY MANUFACTURER. SEE SPECS FOR INSTALLATION INSTRUCTIONS.
B. SEE SPECS FOR FINISH AND COLOR OF COMPONENTS.

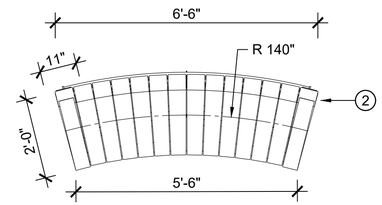

PLAN VIEW

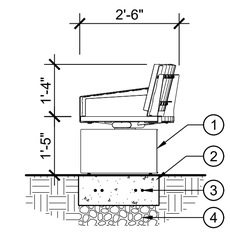

SIDE VIEW

1 FIRST STREET BENCH - SURFACE MOUNT

SCALE: NTS

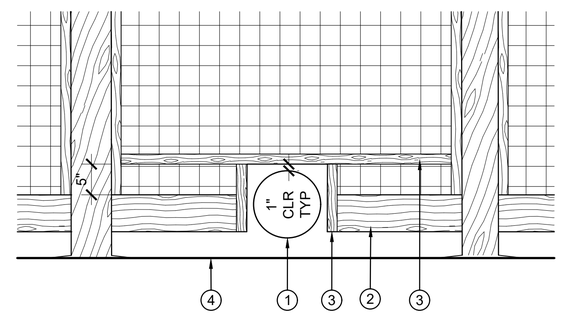

1. 10" HDPE SD PIPE
2. 2X4 HORIZONTAL STRINGER, SANDWICH METAL MESH
3. 2X2 VERTICAL CLOSURE PIECE, SANDWICH METAL MESH.
4. EXISTING CONCRETE CHANNEL WALL

2 OUTFALL PIPE FENCE PENETRATION DETAIL

SCALE: NTS

REVISIONS	
DATE	DESCRIPTION
----	----
----	----
----	----

PROJECT TITLE
FIRST STREET RAIN GARDEN
PROJECT #014-9722

SHEET TITLE
LANDSCAPE DETAILS

DESIGN PHASE
BID SET

Restoration Design Group, Inc.
2332 Fifth Street, Suite C
Berkeley, CA 94710
T 510.644.2798 F 510.644.2799
www.restorationdesigngroup.com

LICENSED LANDSCAPE ARCHITECT
ERIK STROMBERG
#5536
STATE OF CALIFORNIA
SIGNATURE
03/31/23
RENEWAL DATE
DATE

DESIGN BY	AS, MT
DRAWN BY	AS, MT, JH, NQ
CHECKED BY	ES, MT
SCALE	AS NOTED
DATE	JUNE 2, 2022
SHEET	L-3.4

PERENNIAL PLANTING SCHEDULE

BOTANICAL NAME	COMMON NAME	SIZE	SPACING	QTY	WUCOLS	INFO
ACHILLEA MILLEFOLIUM	COMMON YARROW	4" P	2' O.C.	30	L	CA NATIVE, EVERGREEN,SUMMER BLOOMS
ASCLEPIAS SPECIOSA	SHOWY MILKWEED	1 G	3' O.C.	13	L	CA NATIVE, WINTER DECIDUOUS
CAREX BARBARAE	VALLEY SEDGE	1 G	3' O.C.	7	L, M	CA NATIVE, EVERGREEN
CAREX TUMULICOLA	FOOTHILL SEDGE	1 G	2' O.C.	65	M	CA NATIVE, EVERGREEN
ESCHSCHOLZIA CALIFORNICA	CALIFORNIA POPPY	4" P	1' O.C.	50	L	CA NATIVE, SUMMER DECIDUOUS
FESTUCA CALIFORNICA	CALIFORNIA FESCUE	1 G	3' O.C.	20	L	CA NATIVE, EVERGREEN
FESTUCA RUBRA	RED FESCUE	4"	1' O.C.	115	L	CA NATIVE, EVERGREEN
IRIS DOUGLASIANA	DOUGLAS IRIS	1 G	2' O.C.	21	L	CA NATIVE, EVERGREEN
JUNCUS EFFUSUS	SOFT RUSH	1 G	2.5' O.C.	11	M	CA NATIVE, EVERGREEN
JUNCUS PATENS	SPREADING RUSH	1 G	3' O.C.	9	L	CA NATIVE, EVERGREEN
LUPINUS ALBIFRONS	SILVER LUPINE	1 G	3' O.C.	10	L	CA NATIVE, EVERGREEN
MONARDELLA VILLOSA 'RUSSIAN RIVER'	COYOTE MINT	1 G	2.5' O.C.	16	L	CA NATIVE, EVERGREEN
MUHLENBERGIA RIGENS	DEERGRASS	1 G	4' O.C.	10	L	CA NATIVE, EVERGREEN
POLYSTICHUM MUNITUM	SWORD FERN	1 G	3' O.C.	4	L, M	CA NATIVE,EVERGREEN
PRUNELLA VULGARIS	COMMON SELFHEAL	1 G	1' O.C.	22	L, M	CA NATIVE, PERENNIAL, SUMMER BLOOMS
SALVIA MELLIFERA	BLACK SAGE	1 G	3' O.C.	9	VL	CA NATIVE, EVERGREEN
SCROPHULARIA CALIFORNICA	BEE PLANT	1 G	2' O.C.	11	L	CA NATIVE, EVERGREEN, PERENNIAL HERB
STIPA PULCHRA	PURPLE NEEDLEGRASS	1 G	1.5' O.C.	49	VL	CA NATIVE, EVERGREEN

SHRUB PLANTING SCHEDULE

BOTANICAL NAME	COMMON NAME	SIZE	SPACING	QTY	WUCOLS	INFO
BACCHARIS PILULARIS 'PIGEON POINT'	DWARF COYOTE BUSH	5 G	6' O.C.	6	VL	CA NATIVE, EVERGREEN
CEANOTHUS 'JOYCE COULTER'	BLUEBLOSSOM CEANOTHUS	5 G	8' O.C.	4	L	CA NATIVE, EVERGREEN
FRANGULA CALIFORNICA 'EVE CASE'	COFFEEBERRY	5 G	5' O.C.	4	VL	CA NATIVE, EVERGREEN
RIBES SANGUINEUM VAR. GLUTINOSUM	BLOOD CURRANT	5 G	6' O.C.	2	VL	CA NATIVE, WINTER DECIDUOUS
ROSA GYMNOCARPA	DWARF ROSE	5 G	6' O.C.	3	L	CA NATIVE, EVERGREEN

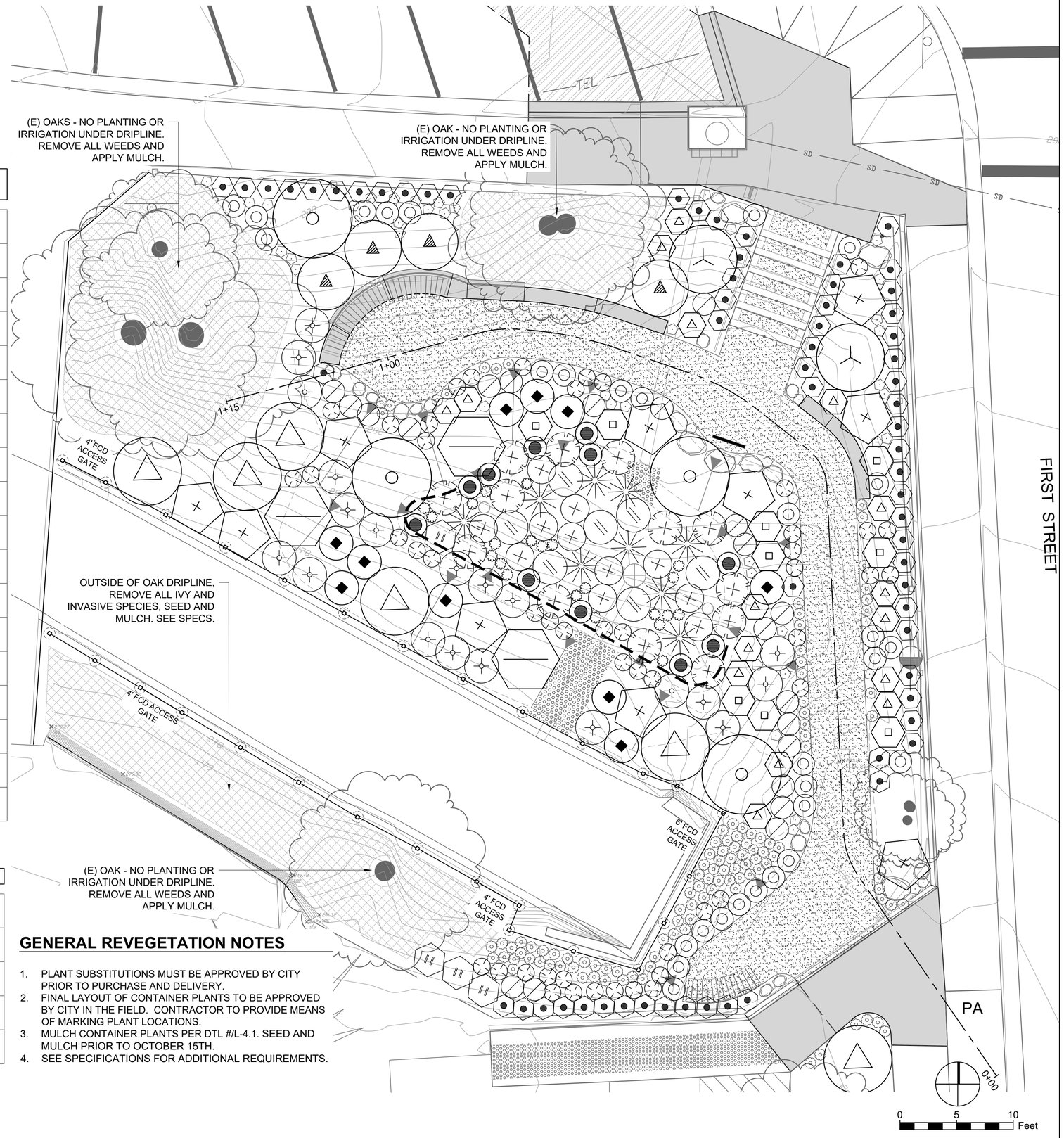

GENERAL REVEGETATION NOTES

1. PLANT SUBSTITUTIONS MUST BE APPROVED BY CITY PRIOR TO PURCHASE AND DELIVERY.
2. FINAL LAYOUT OF CONTAINER PLANTS TO BE APPROVED BY CITY IN THE FIELD. CONTRACTOR TO PROVIDE MEANS OF MARKING PLANT LOCATIONS.
3. MULCH CONTAINER PLANTS PER DTL #/L-4.1. SEED AND MULCH PRIOR TO OCTOBER 15TH.
4. SEE SPECIFICATIONS FOR ADDITIONAL REQUIREMENTS.

REVISIONS

DATE	DESCRIPTION
----	----
----	----
----	----

PROJECT TITLE

FIRST STREET RAIN GARDEN

PROJECT #014-9722

DESIGN PHASE

BID SET

SHEET TITLE

REVEGETATION

RDG

Restoration Design Group, Inc.
2332 Fifth Street, Suite C
Berkeley, CA 94710
T 510.644.2798 F 510.644.2799
www.restorationdesigngroup.com

LICENSED LANDSCAPE ARCHITECT ERIK STROMBERG #5363 STATE OF CALIFORNIA

SIGNATURE 03/31/22 RENEWAL DATE DATE

DESIGN BY	AS, MT
DRAWN BY	AS, MT, JH, NQ
CHECKED BY	ES, MT
SCALE	1" = 5'-0"
DATE	JUNE 2, 2022
SHEET	L-4.0

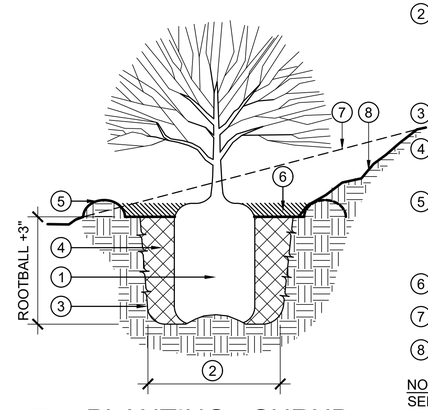

1. CONTAINER PLANT, LARGE: 1 GAL OR LARGER. SET CROWN 1-2" ABOVE FINISHED GRADE
2. PIT DIAMETER, TWO TIMES THE ROOTBALL DIAMETER. EXCAVATE PIT 6" SHALLOWER THAN CONTAINER, DEEPER BEYOND ROOTBALL. PLACE ROOTBALL ON CENTER MOUND AS SHOWN.
3. EDGE OF PIT, FRACTURE & SCARIFY.
4. PLANTING MIX SOIL, BACKFILLED. HAND COMPACT IN 6" LIFTS
5. WATERING BASIN LIP, 2" HEIGHT. DOWN SLOPE EDGE ONLY IN SLOPED CONDITION; COMPLETE PERIMETER IN LEVEL CONDITION
6. MULCH TO 3" DEPTH AT WATER WELL.
7. ORIGINAL GRADE, SLOPED CONDITION
8. FINISHED GRADE, SLOPED CONDITION

NOTE:
SEE SPECIFICATIONS FOR SOIL MIX INFORMATION

1 PLANTING - SHRUB

SCALE: NTS

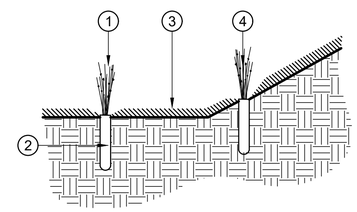

1. CONTAINER PLANT, SMALL: SMALLER THAN 1 GALLON
2. PLANTING PIT, EQUAL DIAMETER TO CONTAINER. USE DIBBLE OR HAND SPADE. SET CROWN ABOVE FINISH GRADE. PINCH SOIL TIGHT AGAINST ROOTS.
3. MULCH / SEEDING, SEE PLANS AND SPECIFICATIONS. KEEP MULCH CLEAR OF CROWN.
4. SLOPED CONDITION - SET PLANT PLUMB

2 PLANT - SMALL

SCALE: NTS

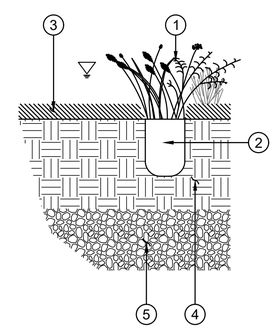

1. CONTAINER PLANT
2. PLANTING PIT, EQUAL DIAMETER TO CONTAINER. SET ROOTBALL CROWN ABOVE FINISH GRADE. PINCH SOIL TIGHT AGAINST ROOTS.
3. MULCH. KEEP CLEAR OF CROWN.
4. BIORETENTION SOIL
5. AGGREGATE BASE. SEE DETAIL 2 / L-2.2

3 PLANTING - BIORETENTION

SCALE: NTS

REVISIONS	
DATE	DESCRIPTION
----	----
----	----
----	----

PROJECT TITLE
FIRST STREET RAIN GARDEN
PROJECT #014-9722

SHEET TITLE
PLANTING DETAILS

DESIGN PHASE
BID SET

RDG
Restoration Design Group, Inc.
2332 Fifth Street, Suite C
Berkeley, CA 94710
T 510.644.2798 F 510.644.2799
www.restorationdesigngroup.com

LICENSED LANDSCAPE ARCHITECT
ERIK STROMBERG
8558
STATE OF CALIFORNIA
SIGNATURE
03/31/23
RENEWAL DATE
DATE

DESIGN BY	AS, MT
DRAWN BY	AS, NQ, JH
CHECKED BY	MT
SCALE	AS SHOWN
DATE	JUNE 2, 2022
SHEET	L-4.1

IRRIGATION NOTES

1. THE IRRIGATION SYSTEM SHALL BE INSTALLED IN CONFORMANCE WITH ALL APPLICABLE STATE AND LOCAL CODES AND ORDINANCES BY LICENSED CONTRACTORS AND EXPERIENCED WORKERS.

2. THIS DESIGN IS DIAGRAMMATIC. ALL PIPING, VALVES, ETC. SHOWN WITHIN PAVED AREAS IS FOR DESIGN CLARIFICATION ONLY AND SHALL BE INSTALLED IN PLANTING AREAS WHERE POSSIBLE. AVOID ANY CONFLICTS BETWEEN THE IRRIGATION SYSTEM, PLANTING AND ARCHITECTURAL FEATURES.

3. PARALLEL PIPES MAY BE INSTALLED IN COMMON TRENCH. PIPES ARE NOT TO BE INSTALLED DIRECTLY ABOVE ONE ANOTHER. TRENCHES SHALL BE AMPLE SIZE TO PERMIT THE PIPES TO BE LAID AT THE ELEVATIONS INTENDED AND TO PERMIT SPACE FOR JOINING.

4. DO NOT WILLFULLY INSTALL THE IRRIGATION SYSTEM AS SHOWN ON THE DRAWINGS WHEN IT IS OBVIOUS IN THE FIELD THAT OBSTRUCTIONS, GRADE DIFFERENCES OR DIFFERENCES IN THE AREA DIMENSIONS EXIST THAT MIGHT NOT HAVE BEEN CONSIDERED IN THE ENGINEERING. SUCH OBSTRUCTIONS OR DIFFERENCES SHOULD BE BROUGHT TO THE ATTENTION OF THE CITY REPRESENTATIVE. IN THE EVENT THAT THIS NOTIFICATION IS NOT PERFORMED, THE CONTRACTOR SHALL ASSUME FULL RESPONSIBILITY FOR ANY REVISIONS NECESSARY.

5. IT IS THE RESPONSIBILITY OF THE CONTRACTOR TO BECOME FAMILIAR WITH ALL GRADE DIFFERENCES, LOCATION OF WALLS, RETAINING WALLS, ETC. COORDINATE WORK WITH THE GENERAL CONTRACTOR AND OTHER SUBCONTRACTORS FOR THE LOCATION AND THE INSTALLATION OF PIPE SLEEVES THROUGH WALLS, UNDER ROADWAYS, PAVING, STRUCTURES, ETC. CONTRACTOR TO VERIFY THE LOCATION OF EXISTING UNDERGROUND UTILITIES AND STRUCTURES PRIOR TO THE EXCAVATION OF TRENCHES. CONTRACTOR IS TO REPAIR ANY DAMAGE CAUSED BY THEIR WORK AT NO ADDITIONAL COST TO THE CITY.

6. DUE TO THE SCALE OF THE DRAWINGS, IT IS NOT POSSIBLE TO INDICATE ALL OFFSETS, FITTINGS, SLEEVES, ETC., WHICH MAY BE REQUIRED. CAREFULLY INVESTIGATE THE STRUCTURAL AND FINISHED CONDITIONS AFFECTING ALL WORK AND PLAN WORK ACCORDINGLY, FURNISHING SUCH FITTINGS, ETC., AS MAY BE REQUIRED TO MEET SUCH CONDITIONS. DRAWINGS ARE GENERALLY DIAGRAMMATIC AND INDICATIVE OF THE WORK TO BE INSTALLED.

7. EACH CONTROLLER SHALL HAVE ITS OWN INDEPENDENT GROUND WIRE.

8. REMOTE CONTROL VALVES SHALL BE WIRED TO CONTROLLER IN SEQUENCE AS SHOWN ON PLANS. RUN WIRE FROM EACH RCV TO THE CONTROLLER. SPLICING WIRES TOGETHER OUTSIDE OF VALVE BOXES WILL NOT BE PERMITTED.

9. SPLICING OF 24-VOLT WIRES WILL NOT BE PERMITTED EXCEPT IN VALVE BOXES. LEAVE A 36" COIL OF EXCESS WIRE AT EACH SPLICE AND 100 FEET ON CENTER ALONG WIRE RUN. ALL WIRE SHALL BE INSTALLED IN THE APPROPRIATE SIZE CONDUIT.

10. WIRE CONNECTORS SHALL BE 3M-DBR/Y-6 DIRECT BURY UNLESS OTHERWISE NOTED.

11. INSTALL ONE (1) SPARE CONTROL WIRE FOR EVERY 6 (SIX) STATIONS ON THE CONTROLLER ALONG THE ENTIRE MAIN LINE. SPARE WIRES SHALL BE THE SAME COLOR (ONE WITH A WHITE STRIPE) AND OF A DIFFERENT COLOR THAN OTHER CONTROL WIRES. LOOP 36" EXCESS WIRE INTO EACH SINGLE VALVE BOX AND INTO ONE VALVE BOX IN EACH GROUP OF VALVES.

12. VALVE LOCATIONS SHOWN ARE DIAGRAMMATIC. INSTALL IN GROUND COVER/SHRUB AREAS WHERE POSSIBLE

13. INSTALL VALVE BOXES MINIMUM 12" FROM AND PERPENDICULAR TO WALK, CURB, BUILDING OR LANDSCAPE FEATURE. AT MULTIPLE VALVE BOX GROUPS, EACH BOX SHALL BE AN EQUAL DISTANCE FROM THE WALK, CURB, ETC. AND EACH BOX SHALL BE MINIMUM 12" APART. SHORT SIDE OF VALVE BOXES SHALL BE PARALLEL TO WALK, CURB, ETC.

14. PRESSURE REGULATING DEVICES ARE REQUIRED IF WATER PRESSURE EXCEEDS THE RECOMMENDED PRESSURE OF THE SPECIFIED IRRIGATION DEVICES.

15. LOCATE QUICK COUPLING VALVE 12" FROM HARDSCAPE AREA.

16. FOR DRIP OR BUBBLER CIRCUITS, INSTALL KING BROS. CV SERIES CHECK VALVES IN LATERAL LINES FOR EVERY 10' OF ELEVATION CHANGE.

17. ALL MAIN LINES SHALL BE FLUSHED PRIOR TO THE INSTALLATION OF IRRIGATION BUBBLERS AND DRIP TUBING. AT 30 DAYS AFTER INSTALLATION EACH SYSTEM SHALL BE FLUSHED TO ELIMINATE GLUE AND DIRT PARTICLES FROM THE LINES.

18. FOR PROPER SOLVENT WELD OF PVC A SUITABLE PRIMER AND SOLVENT CEMENT SHALL BE USED. APPLICATION PRACTICE AND TECHNIQUE SHALL BE IN ACCORDANCE WITH THE PRIMER/CEMENT MANUFACTURER'S RECOMMENDATIONS. THE JOINING SURFACES MUST BE SOFTENED (WITH PRIMER/CEMENT) AND THE PIPE AND FITTING MUST BE ASSEMBLED WHILE THE SURFACES ARE STILL WET AND FLUID.

19. NOTIFY CITY OF ANY ASPECTS OF LAYOUT THAT WILL PROVIDE INCOMPLETE OR INSUFFICIENT WATER COVERAGE OF PLANT MATERIAL AND DO NOT PROCEED UNTIL HIS/HER INSTRUCTIONS ARE OBTAINED.

20. LOCATE BUBBLERS ON UPHILL SIDE OF TREES. TREE BUBBLERS ARE FOR ESTABLISHMENT AND DROUGHT CONDITIONS. THEY ARE TO BE TURNED OFF AFTER TREES ARE ESTABLISHED AND TURNED ON DURING DROUGHT CONDITIONS.

21. IN ADDITION TO THE SLEEVES AND CONDUITS SHOWN ON THE DRAWINGS, THE IRRIGATION CONTRACTOR SHALL BE RESPONSIBLE FOR COORDINATING THE INSTALLATION OF SLEEVES AND CONDUITS OF SUFFICIENT SIZE UNDER ALL PAVED AREAS.

22. WHERE IT IS NECESSARY TO EXCAVATE ADJACENT TO EXISTING TREES, USE ALL POSSIBLE CARE TO AVOID INJURY TO TREES, AND TREE ROOTS. EXCAVATION IN AREAS WHERE 2 INCH AND LARGER ROOTS OCCUR SHALL BE DONE BY HAND. ROOTS 2 INCHES AND LARGER IN DIAMETER SHALL BE WRAPPED IN A PLASTIC BAG AND SECURED WITH A RUBBER BAND. TRENCHES ADJACENT TO TREE SHOULD BE CLOSED WITHIN 24 HOURS; WHERE THIS IS NOT POSSIBLE, THE SIDE OF THE TRENCH ADJACENT TO THE TREE SHALL BE KEPT SHADED WITH WET BURLAP OR CANVAS.

23. THE IRRIGATION SYSTEM DESIGN IS BASED ON THE MINIMUM OPERATING PRESSURE SHOWN ON THE IRRIGATION DRAWINGS. VERIFY WATER PRESSURE PRIOR TO CONSTRUCTION. REPORT ANY DIFFERENCE BETWEEN THE WATER PRESSURE INDICATED ON THE DRAWINGS AND THE ACTUAL PRESSURE READING AT THE IRRIGATION POINT OF CONNECTION TO THE CITY REPRESENTATIVE.

24. IRRIGATION DEMAND: REFER TO IRRIGATION POINTS OF CONNECTION.

25. CONNECT FLOW SENSOR TO CONTROLLER WITH 2 CONDUCTOR DIRECT BURIAL SHIELDED SENSOR CABLE (EV-CAB-SEN.) INSTALL EACH CABLE IN A SEPARATE 1" PVC SCHEDULE 40 CONDUIT.

26. CONTRACTOR SHALL VERIFY REMOTE AND WEATHER SENSOR RECEPTION TO THE RECEIVER PRIOR TO INSTALLING THE CONTROLLER. IF SIGNAL IS TOO WEAK, EXTEND THE RECEIVER OUT TO A MAXIMUM OF 10' FROM THE CONTROLLER USING A 6 PIN PHONE CABLE WITH FEMALE ADAPTER. IF RECEPTION IS STILL TOO WEAK, CONTACT THE CITY REPRESENTATIVE FOR FURTHER INSTRUCTION .

27. OPERATE IRRIGATION CONTROLLER(S) BETWEEN THE HOURS OF 10:00 PM AND 5:00 AM.

28. NOTIFY CITY FOR INSPECTION AND TESTING OF INSTALLED BACKFLOW PREVENTION DEVICE.

29. NOTIFY UNDERGROUND SERVICE ALERT AT 811 AT LEAST 48 HOURS PRIOR TO ANY EXCAVATION.

30. A LAMINATED DIAGRAM OF THE IRRIGATION PLAN SHOWING HYDROZONES SHALL BE KEPT WITH THE IRRIGATION CONTROLLER FOR SUBSEQUENT MANAGEMENT PURPOSES. (PROVIDE THREE(3) LAMINATED COPIES.)

31. A CERTIFICATE OF COMPLETION SHALL BE FILLED OUT AND CERTIFIED BY EITHER THE DESIGNER OF THE LANDSCAPE PLANS, IRRIGATION PLANS, OR THE LICENSED LANDSCAPE CONTRACTOR FOR THE PROJECT.

32. AN IRRIGATION AUDIT REPORT SHALL BE COMPLETED AT THE TIME OF FINAL INSPECTION. THE IRRIGATION CONTRACTOR SHALL ARRANGE AND PAY FOR THE AUDIT. THE AUDIT MUST BE PERFORMED BY A THIRD PARTY CERTIFIED LANDSCAPE IRRIGATION AUDITOR.

DRIPLINE NOTES:

1. PLANS ARE DIAGRAMMATIC. INSTALL DRIPLINE AND COMPONENTS PER MANUFACTURERS INSTRUCTIONS AND INSTALLATION DETAILS.

2. INSTALL DRIPLINE A MAXIMUM OF 18" APART (12" IN BIORETENTION) WITH EMITTERS TRIANGULARLY SPACED. INSTALL 2" FROM PERIMETER OF PLANTED AREA. THERE SHOULD BE A MINIMUM OF TWO DRIPLINE LATERALS IN EACH PLANTED AREA. DRIPLINE SHALL BE INSTALLED AT A CONSISTANT DEPTH THROUGHOUT THE CIRCUIT.

3. PLACE FLUSH VALVES AT THE HYDRAULIC CENTER OF THE EXHAUST HEADER OR AT LOW POINT ON SLOPES. INSTALL MINIMUM OF ONE FOR EVERY 15 GPM.

4. INSTALL IN-LINE CHECK VALVES ON SLOPES GREATER THAN 3% AND WHERE LOW-LINE DRAINAGE COULD CAUSE WET AREAS IN THE LOWEST AREAS OF AN IRRIGATION ZONE. CHECK VALVES SHALL BE PLACED EVERY 4-5 FEET BETWEEN DRIPLINE LATERALS AND BEFORE THE FLUSH VALVE.

5. ON ALL SLOPES AND MOUNDS, PLACE THE DRIPLINE LATERALS PARALLEL TO THE SLOPE CONTOUR WHERE POSSIBLE. INCREASE THE LATERAL SPACING BY 25% ON THE LOWER ONE-THIRD OF THE SLOPE TO AVOID EXCESS DRAINAGE.

6. PVC SUPPLY AND FLUSH LINE SIZING GUIDE (ALL SUPPLY AND FLUSH LINES SHALL BE THE SAME SIZE FOR THE ENTIRE ZONE):
   FOR SCH. 40 LATERAL
   - 0-5 GPM - 3/4"
   - 5.1-10 GPM - 1"
   - 10.1-20 GPM - 1 1/4"
   - 20.1-28 GPM - 1 1/2"

7. FITTINGS SHALL BE OF THE SAME MANUFACTURER AS DRIPLINE.

8. THOROUGHLY FLUSH EACH INSTALLATION SEGMENT TO ENSURE NO DEBRIS CONTAMINATION OCCURS.

9. RUN THE DRIPLINE SYSTEM EVERY DAY OR EVERY OTHER DAY TO ESTABLISH PLANT MATERIAL. MAINTAIN A CONSISTENT MOISTURE BALANCE IN THE SOIL. IT IS IMPORTANT TO KEEP THE SOIL MOIST WITHOUT SATURATION.

"I HAVE COMPLIED WITH THE CRITERIA OF THE MODEL WATER EFFICIENT LANDSCAPE ORDIANCE AND HAVE APPLIED THEM FOR THE EFFICIENT USE OF WATER IN THE IRRIGATION DESIGN PLAN."

LATERAL LINE SIZING CHART

SPRINKLER TYPE	GPM	NO. OF BUBBLERS*	PIPE SIZE
BUBBLERS - 4 GPH	1-5 5.1-15	1-75 76-225	3/4" 1"
BUBBLERS - 9 GPH	1-5 5.1-15	1-32 33-96	3/4" 1"

* QUANTITY INDICATES NO. OF BUBBLERS, NOT NO. OF TREES. THERE ARE TWO BUBBLERS PER TREE AND ONE BUBBLER PER SHRUB. LATERAL LINE FROM REMOTE CONTROL VALVE TO FIRST BUBBLER SHALL BE 1" MINIMUM.

IRRIGATION LEGEND

SYMBOL	MODEL NUMBER	DESCRIPTION	PSI	FLOW RATE (GPM)	MAX. RADIUS	MAX. SPACING
▲	DB-04-PC-CV	TORO PRESSURE COMPENSATING DRIP BUBBLER INSTALL ONE BUBBLER PER SHRUB	40	4 GPH	-	-
■	DB-09-PC-CV	TORO PRESSURE COMPENSATING DRIP BUBBLER INSTALL TWO BUBBLERS PER TREE	40	9 GPH	-	-
△	EBV-0500-S	NDS 1/2" BALL VALVE FOR FLUSHING				
	570-DRIP-IND	TORO POP-UP SPRAY OPERATION INDICATOR W/ MPR 5' NOZZLE ADJUSTED TO NO FLOW				
	ICZ-101-40 / LT-1000-T	HUNTER DRIP ZONE VALVE KIT - INCL. REMOTE CONTROL VALVE, WYE FILTER WITH 150 MESH SCREEN, AND PRESET PRESSURE REGULATOR / NDS PVC BALL VALVE (5.1-20 GPM)				
	ICZ-101-LF-25 / LT-1000-T	HUNTER DRIP ZONE VALVE KIT - INCL. REMOTE CONTROL VALVE, WYE FILTER WITH 150 MESH SCREEN, AND PRESET PRESSURE REGULATOR / NDS PVC BALL VALVE (.5-5 GPM)				
	100-2SLLVC/075-MHS	TORO QUICK COUPLING VALVE WITH 3/4" HOSE SWIVEL				
	T-113-LF	NIBCO LEAD FREE GATE VALVE (LINE SIZE)				
⊠	FSI-T10-001	CST 1" FLOW SENSOR				
	2160-H	GRISWOLD 1" MASTER CONTROL VALVE (NORMALLY OPEN)				
	975XL2-1" / GS-1 (BLACK)	WILKINS LEAD-FREE REDUCED PRESSURE BACKFLOW PREVENTER IN GUARDSHACK ENCLOSURE				
	600L-1"	1" WILKINS PRESSURE REGULATING VALVE				
R	RS 1000	IRRITROL WIRELESS RAIN SENSOR				
C	SA6-RM6-06/DX3CA/RSE/ PMR-CAC/GTFSV-100P	TOP ENTRY DXI CONTROLLER GREEN TECH ASSEMBLY WITH CELL COMMUNICATION, RAIN SENSOR AND REMOTE RECEIVER				
C-1		CONTROLLER AND STATION NUMBER				
1.6		APPLICATION RATE (INCHES)				
1"		REMOTE CONTROL VALVE SIZE				
15		OPERATING PRESSURE (PSI)				
30		APPROXIMATE GALLONS PER MINUTE				
		MAIN LINE: 1120-SCHEDULE 40 PVC SOLVENT WELD PLASTIC PIPE WITH SCHEDULE 80 AND SCHEDULE 40 PVC SOLVENT WELD FITTINGS. 18" COVER.				
		LATERAL LINE: 1120-SCHEDULE 40 PVC SOLVENT WELD PIPE WITH SCHEDULE 40 PVC SOLVENT WELD FITTINGS. 12" COVER.				
		SUB-SURFACE DRIPLINE: NETAFIM TLHCVXR5-12 DRIPLINE. USE ONLY NETAFIM DRIPLINE INSERT BARB FITTINGS. 2" COVER. (12" EMITTER SPACING; .53 GPH PER EMITTER)				
		SUB-SURFACE DRIPLINE: NETAFIM TLHCVXR11-12 DRIPLINE WITH ROOT GUARD. USE ONLY DL2000 DRIPLINE INSERT BARB FITTINGS. 2" COVER. (12" EMITTER SPACING; 1.16 GPH PER EMITTER)				
		SLEEVE (SL): 1120-CLASS 200 PVC PLASTIC PIPE. 24" COVER.				

REVISIONS	
DATE	DESCRIPTION
----	----
----	----
----	----

PROJECT TITLE
FIRST STREET RAIN GARDEN

SHEET TITLE
IRRIGATION NOTES & LEGEND

DESIGN PHASE
BID SET

BROOKWATER
IRRIGATION CONSULTANTS
480 ST. JOHN STREET, SUITE 220
PLEASANTON, CALIFORNIA 94566
TEL 925.855.0417 FAX 925.855.0357
E-MAIL JANET@BROOKWATER.COM

JANET S. LUEHRS
Certified Irrigation Designer
CID
43274

DESIGN BY	
DRAWN BY	EK
CHECKED BY	JL
SCALE	NO SCALE
DATE	JUNE 2, 2022
SHEET	I-5.0

OF 05

IRRIGATION DEMAND: 8 GPM AT 60 PSI. STREET PRESSURE IS 125 PSI. SET PRV (PRESSURE REDUCING VALVE) AT 50 PSI. FIELD VERIFY STATIC WATER PRESSURE PRIOR TO STARTING ANY WORK.

IRRIGATION CONTROLLER 'C' - MOUNT IN ENCLOSURE AT THE LOCATION DIRECTED BY CITY. SERVICE WITH 120 VOLT A.C. ELECTRICAL. ELECTRICAL SERVICE TO THIS LOCATION PROVIDED BY ELECTRICAL CONTRACTOR. ENSURE CONTROLLER IS GROUNDED AND CONFORMS TO ALL APPLICABLE LOCAL CODES. RUN A SEPARATE 1" CONDUIT WITH MANUFACTURER APPROVED DIRECT BURY SHIELDED FLOW SENSOR CABLE FROM CONTROLLER TO FLOW SENSOR.

POINT OF CONNECTION: CONNECT IRRIGATION MAINLINE TO EXISTING WATER METER. CONTRACTOR TO FIELD VERIFY EXACT LOCATION.

RAIN SENSOR TRANSMITTER- INSTALL WHERE TRANSMITTER IS EXPOSED TO FULL WEATHER CONDITIONS. VERIFY COMMUNICATION RECEPTION TO THE RECEIVER PRIOR TO INSTALLATION. FINAL LOCATION TO BE DETERMINED IN THE FIELD.

"I HAVE COMPLIED WITH THE CRITERIA OF THE MODEL WATER EFFICIENT LANDSCAPE ORDIANCE AND HAVE APPLIED THEM FOR THE EFFICIENT USE OF WATER IN THE IRRIGATION DESIGN PLAN."

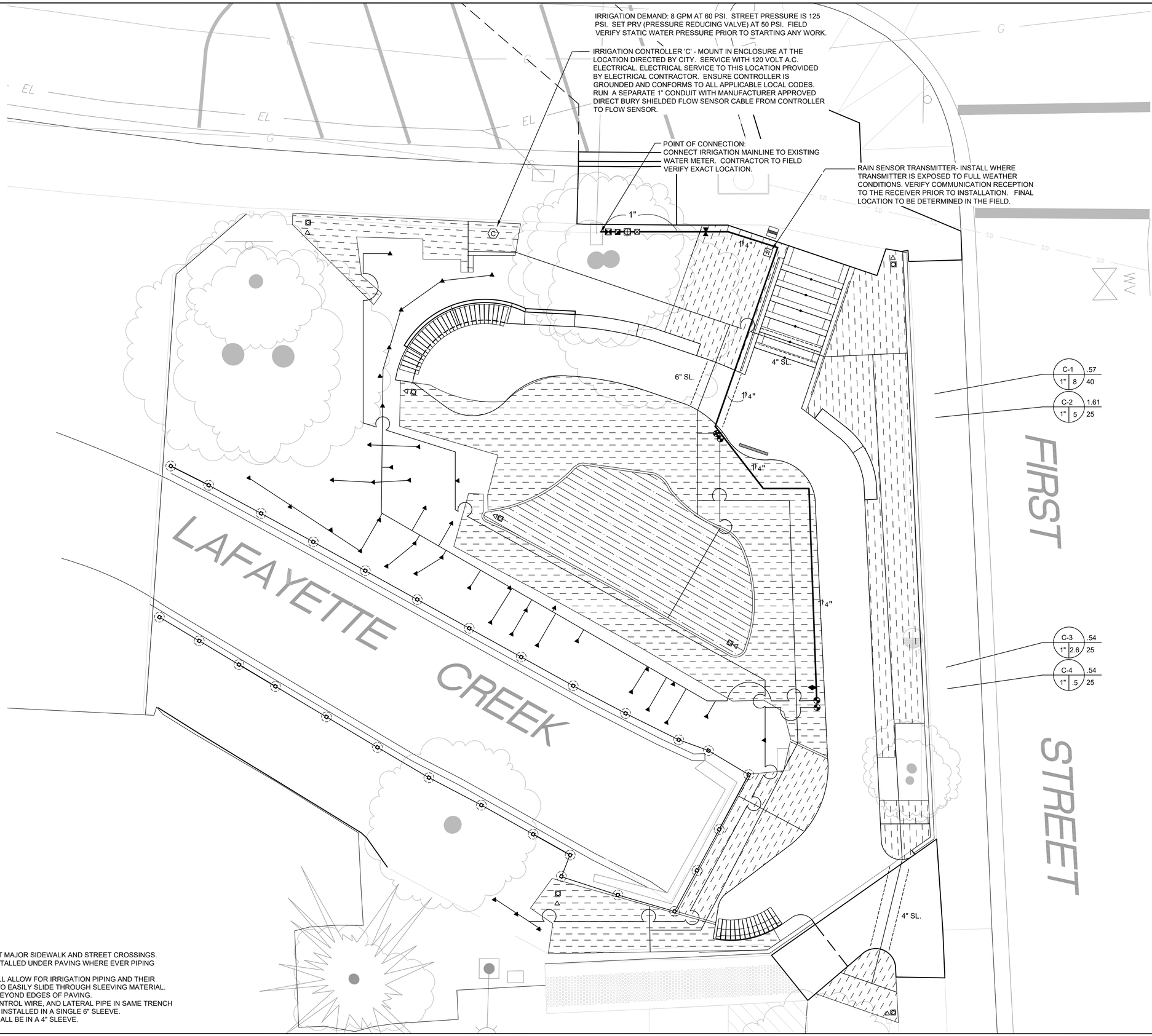

SLEEVING NOTES:

1. SLEEVING IS SHOWN AT MAJOR SIDEWALK AND STREET CROSSINGS. SLEEVES SHALL BE INSTALLED UNDER PAVING WHERE EVER PIPING CROSSES PAVING.
2. PIPE SLEEVE SIZE SHALL ALLOW FOR IRRIGATION PIPING AND THEIR RELATED COUPLINGS TO EASILY SLIDE THROUGH SLEEVING MATERIAL.
3. EXTEND SLEEVES 18" BEYOND EDGES OF PAVING.
4. ALL MAINLINE PIPE, CONTROL WIRE, AND LATERAL PIPE IN SAME TRENCH AS MAINLINE SHALL BE INSTALLED IN A SINGLE 6" SLEEVE.
5. LATERAL PIPE ONLY SHALL BE IN A 4" SLEEVE.

REVISIONS

DATE	DESCRIPTION
----	----
----	----
----	----

PROJECT TITLE
FIRST STREET RAIN GARDEN

SHEET TITLE
IRRIGATION PLAN

DESIGN PHASE
BID SET

BROOKWATER
IRRIGATION CONSULTANTS
480 ST. JOHN STREET, SUITE 220
PLEASANTON, CALIFORNIA 94566
TEL 925.855.0417 FAX 925.855.0357
E-MAIL JANET@BROOKWATER.COM

JANET S. LUEHRS
Certified Irrigation Designer
CID
43274

DESIGN BY	
DRAWN BY	EK
CHECKED BY	JL
SCALE	1" = 5'-0"
DATE	JUNE 2, 2022
SHEET	I-5.1

OF 05

NOTE: EVENLY COAT METAL FITTINGS EXPOSED TO SOIL AND CONCRETE WITH 3M SCOTCHRAP PIPE PRIMER AND THEN WRAP WITH 3M SCOTCHRAP NO. 51 BLACK TAPE (3/4" OVERLAP). USE DIELECTRIC FITTINGS WHERE DISSIMILAR METALS COME INTO CONTACT.

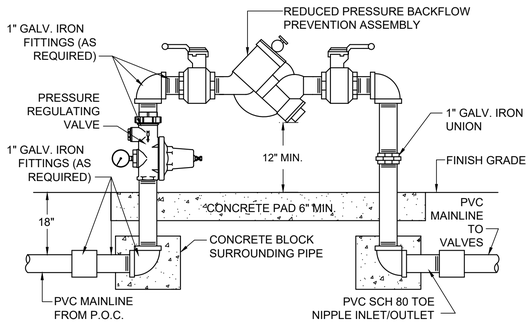

1 REDUCED PRESSURE BACKFLOW ASSEMBLY

NOT TO SCALE

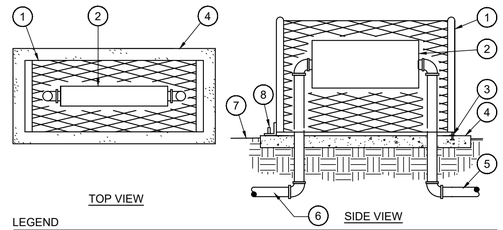

LEGEND

1. METAL BACKFLOW ENCLOSURE - POWDER COATED BLACK
2. BACKFLOW PREVENTER.
3. HOLD DOWN ASSEMBLY (TYPICAL).
4. POURED CONCRETE BASE. - 6" MINIMUM THICKNESS - EXTEND 6" BEYOND OUTSIDE DIMENSIONS OF ENCLOSURE.
5. MAINLINE TO VALVES.
6. MAINLINE FROM POINT OF CONNECTION OR WATER METER.
7. FINISH GRADE.
8. SUPPORT ROD (TYPICAL).

2 U-SHAPE BACKFLOW ENCLOSURE

NOT TO SCALE

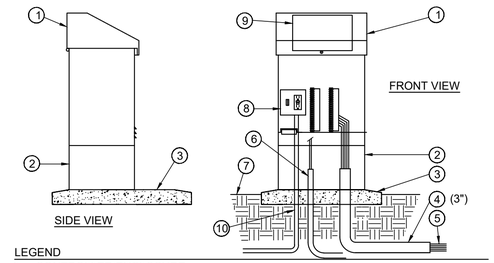

LEGEND

1. CONTROLLER ENCLOSURE.
2. PEDESTAL.
3. POURED CONCRETE BASE - 6" MIN. THICKNESS - EXTEND 6" BEYOND EACH SIDE AND BACK, 12" IN FRONT OF ENCLOSURE W/ 1/2% SLOPE FOR DRAINAGE.
4. PVC LONG SWEEP ELL - USE ONE PER CONTROLLER.
5. DIRECT BURIAL CONTROL WIRES TO CONTROL VALVES.
6. 1" CONDUIT FOR FLOW SENSOR CABLE.
7. FINISH GRADE.
8. CONTROLLER SUB-ASSEMBLY (CSA) INCLUDES GFI & TERMINAL STRIPS WITH PLACARDS.
9. AUTOMATIC CONTROLLER.
10. 120-VOLT SERVICE.

3 CONTROLLER ENCLOSURE - TOP ENTRY

NOT TO SCALE

"I HAVE COMPLIED WITH THE CRITERIA OF THE MODEL WATER EFFICIENT LANDSCAPE ORDIANCE AND HAVE APPLIED THEM FOR THE EFFICIENT USE OF WATER IN THE IRRIGATION DESIGN PLAN."

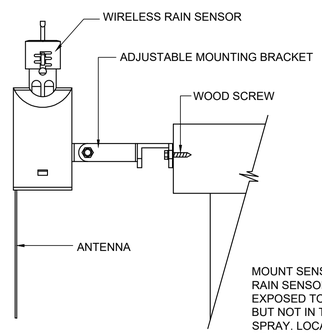

MOUNT SENSOR VERTICALLY. MOUNT RAIN SENSOR WHERE IT WILL BE EXPOSED TO UNOBSTRUCTED RAINFALL BUT NOT IN THE PATH OF SPRINKLER SPRAY. LOCATE WITHIN 300 FEET OF SENSOR RECEIVER AND CONTROLLER.

4 WIRELESS RAIN SENSOR INSTALLATION DETAIL

NOT TO SCALE

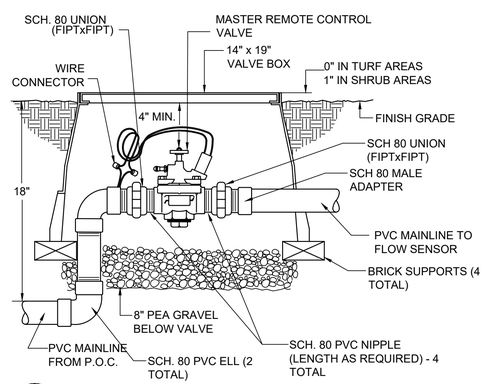

5 MASTER REMOTE CONTROL VALVE

NOT TO SCALE

NOTE: FLOW SENSOR MUST BE INSTALLED WITH INSERT (TOP) VERTICAL AND BODY (TEE) POSITIONED HORIZONTALLY.

#20 GAUGE DIRECT BURIAL SENSOR CABLE, PROVIDE 36" EXTRA CABLE. (MUST BE RUN IN 1" CONDUIT FROM SENSOR TO CONTROLLER)

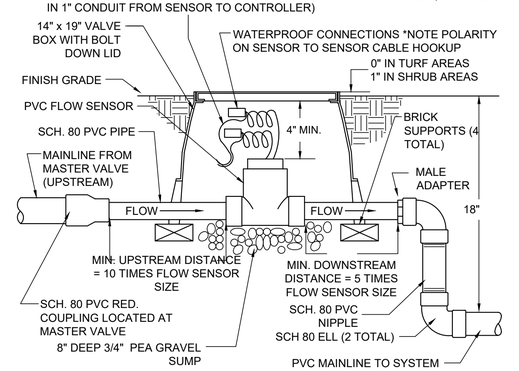

6 PVC FLOW SENSOR INSTALLATION DETAIL

NOT TO SCALE

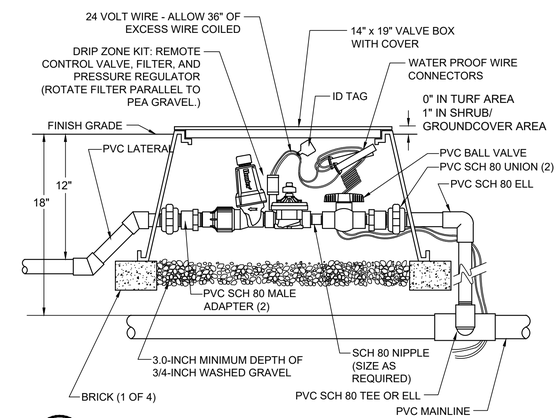

7 HUNTER DRIP ZONE KIT

NOT TO SCALE

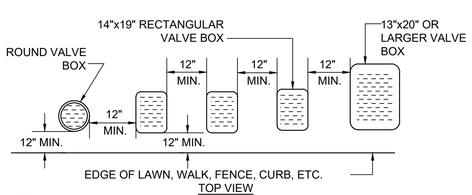

NOTES:

1. CENTER BOX OVER VALVE TO FACILITATE SERVICING VALVE.
2. SET BOXES 1" ABOVE FINISH GRADE OR MULCH COVER IN GROUND AREA AND FLUSH WITH FINISH GRADE IN TURF AREA. COVER/SHRUB
3. SET VALVE BOX ASSEMBLY IN GROUND COVER/SHRUB AREA WHERE INSTALL IN LAWN AREA ONLY IF GROUND COVER/SHRUB AREA DOES NOT EXIST ADJACENT TO LAWN. POSSIBLE.
4. SET BOXES PARALLEL TO EACH OTHER AND PERPENDICULAR TO EDGE.
5. AVOID HEAVILY COMPACTING SOIL AROUND VALVE BOX EDGES TO PREVENT COLLAPSE AND DEFORMATION OF VALVE BOX SIDES.
6. VALVE BOXES SHALL HAVE BOLT DOWN LIDS WITH BOLTS INSTALLED.
7. VALVE BOXES SHALL BE BY NDS, CARSON, OR EQUAL.

8 VALVE BOX INSTALLATION DETAIL

NOT TO SCALE

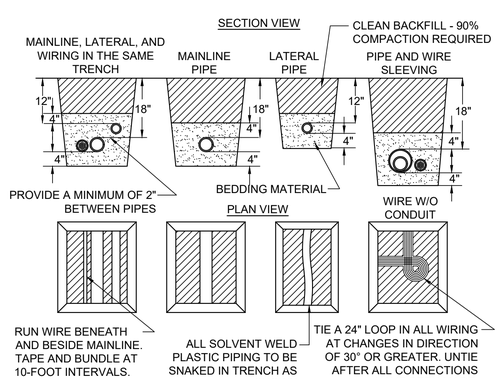

NOTES:

1. SLEEVE BELOW ALL HARDSCAPE ELEMENTS WITH SPECIFIED PVC PIPE TWICE THE DIAMETER OF THE PIPE OR WIRE BUNDLE WITHIN.
2. WIRE SHALL BE INSTALLED IN CONDUIT.

9 PIPE AND WIRE TRENCHING

NOT TO SCALE

STEP 1: STRIP WIRES 1/2" FROM ENDS.

STEP 2: APPLY SCOTCHLOK Y SPRING CONNECTOR IN A CLOCKWISE DIRECTION.

STEP 3: INSERT SPLICE TO BOTTOM OF GEL-FILLED TUBE. CHECK TO MAKE SURE CONNECTOR HAS BEEN PUSHED PAST LOCKING FINGERS AND IS SEATED AT BOTTOM OF TUBE.

STEP 4: POSITION WIRES IN WIRE CHANNELS AND CLOSE INSULATOR TUBE COVER.

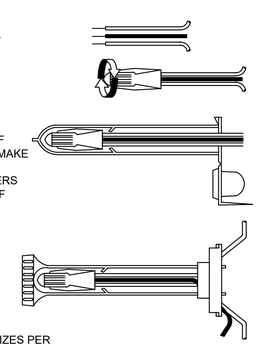

NOTE: MAXIMUM WIRE SIZES PER CONNECTOR ARE THREE # 14'S OR TWO #12'S.

10 WIRE CONNECTION DETAIL

NOT TO SCALE

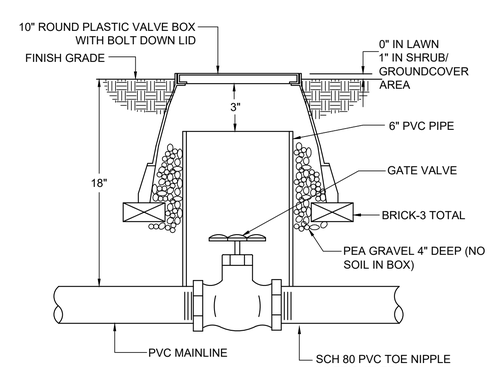

11 GATE VALVE DETAIL

NOT TO SCALE

REVISIONS	
DATE	DESCRIPTION
----	----
----	----
----	----

PROJECT TITLE

FIRST STREET RAIN GARDEN

SHEET TITLE

IRRIGATION DETAILS

DESIGN PHASE

BID SET

BROOKWATER
IRRIGATION CONSULTANTS
480 ST. JOHN STREET, SUITE 220
PLEASANTON, CALIFORNIA 94566
TEL 925.855.0417 FAX 925.855.0357
E-MAIL JANET@BROOKWATER.COM

JANET S. LUEHRS Certified Irrigation Designer CID 43274

DESIGN BY	
DRAWN BY	EK
CHECKED BY	JL
SCALE	NO SCALE
DATE	JUNE 2, 2022
SHEET	I-5.2

OF 05

"I HAVE COMPLIED WITH THE CRITERIA OF THE MODEL WATER EFFICIENT LANDSCAPE ORDIANCE AND HAVE APPLIED THEM FOR THE EFFICIENT USE OF WATER IN THE IRRIGATION DESIGN PLAN."

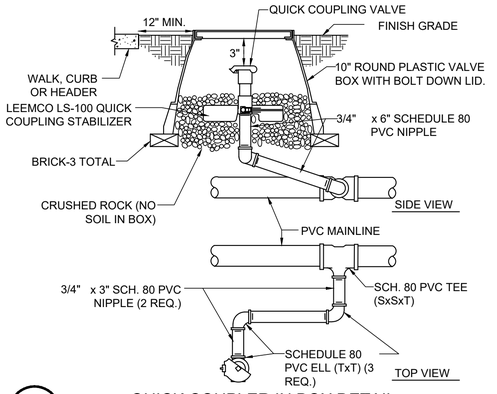

12 QUICK COUPLER IN BOX DETAIL

NOT TO SCALE

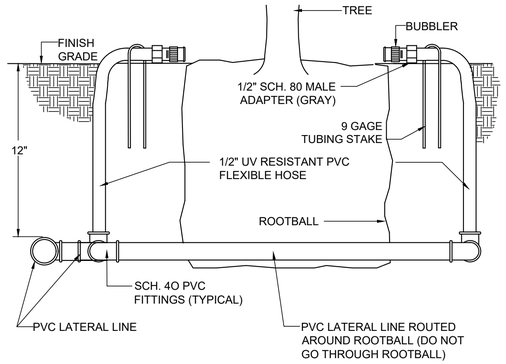

13 TREE BUBBLER DETAIL

NOT TO SCALE

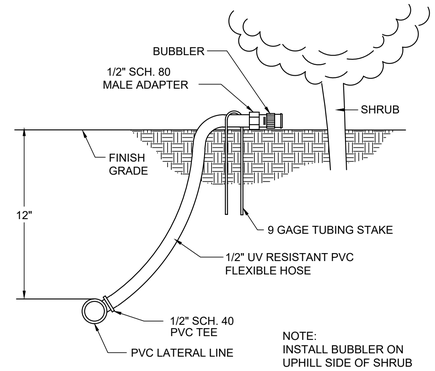

NOTE:
INSTALL BUBBLER ON UPHILL SIDE OF SHRUB

14 SHRUB BUBBLER ON FLEX HOSE DETAIL

NOT TO SCALE

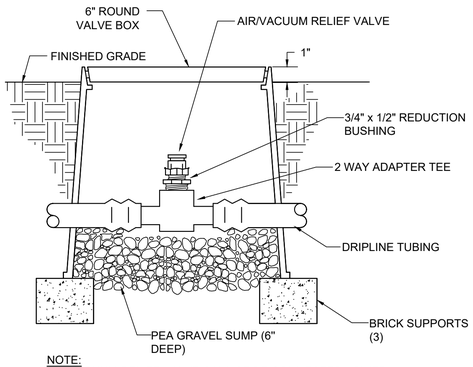

NOTE:
AIR/VACUUM RELIEF VALVE CANNOT BE CONNECTED LOWER THAN DRIPLINE LATERALS.

15 AIR/VACUUM RELIEF VALVE - PLUMBED TO TUBING

NOT TO SCALE

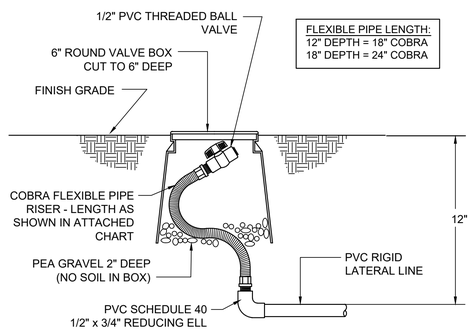

FLEXIBLE PIPE LENGTH:
12" DEPTH = 18" COBRA
18" DEPTH = 24" COBRA

16 MANUAL FLUSH VALVE DETAIL

NOT TO SCALE

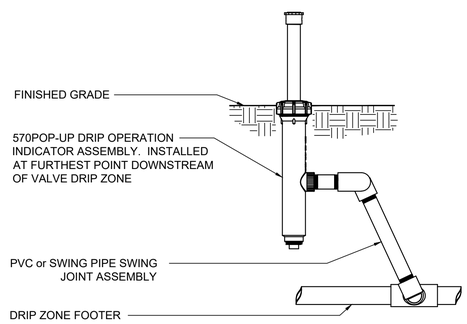

17 TORO 570 POP-UP DRIP OPERATION INDICATOR

NOT TO SCALE

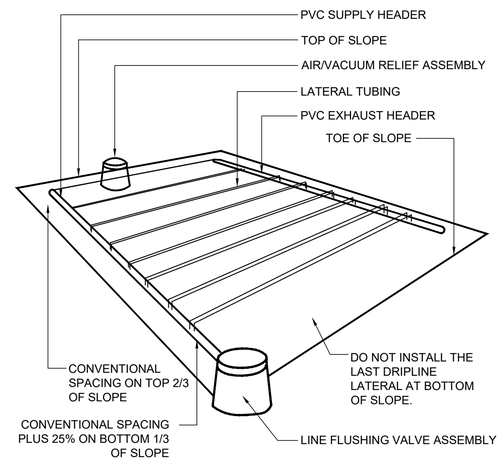

NOTE:
ALIGN DRIPLINE LATERALS PARALLEL TO THE CONTOURS OF THE SLOPE

18 INLINE DRIP SPACING LAYOUT ON SLOPE

NOT TO SCALE

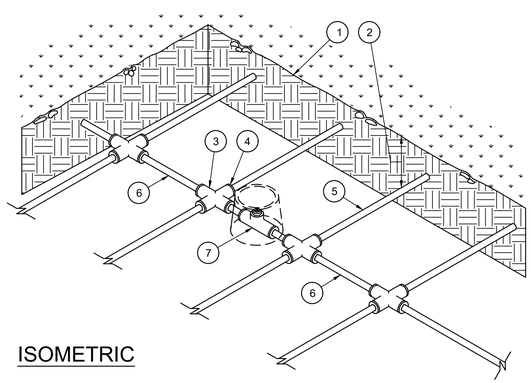

ISOMETRIC

LEGEND

1. FINISH GRADE.
2. DEPTH OF TUBING PER SPECIFICATIONS
3. PVC CROSS (SxSxSxS)
4. COMPRESSION ADAPER.
5. DRIPLINE LATERAL.
6. AIR/VACUUM RELIEF LATERAL, BLANK POLY TUBING CENTERED ON MOUND OR BERM
7. AIR/VACUUM RELIEF VALVE AT HIGH POINT. REFER TO AIR/VACUUM RELIEF VALVE DETAIL.

19 AIR/VACUUM RELIEF LATERAL

NOT TO SCALE

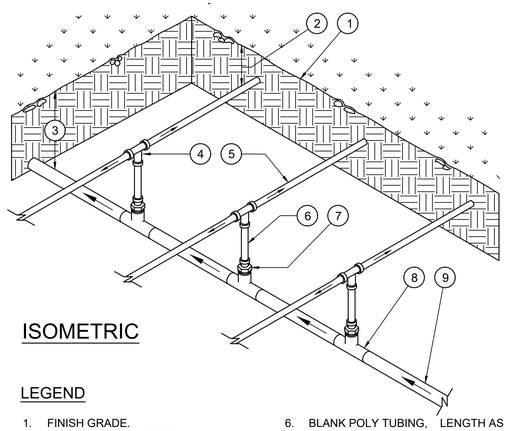

ISOMETRIC

LEGEND

1. FINISH GRADE.
2. DEPTH OF TUBING PER SPECIFICATIONS
3. DEPTH OF PVC SUPPLY MANIFOLD PER SPECIFICATIONS.
4. DRIPLINE TEE FITTING.
5. DRIPLINE LATERAL.
6. BLANK POLY TUBING, LENGTH AS NECESSARY.
7. DRIPLINE MPT ADAPTER.
8. PVC TEE (SxSxT) WITH 1/2" FPT OUTLET.
9. PVC SUPPLY MANIFOLD FROM REMOTE CONTROL VALVE ASSEMBLY.

20 CENTER FEED MANIFOLD

NOT TO SCALE

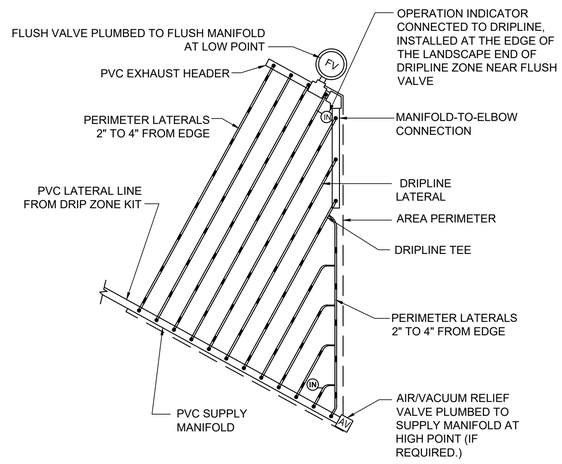

PLAN

21 TYPICAL ISLAND LAYOUT END FEED

NOT TO SCALE

REVISIONS	
DATE	DESCRIPTION
----	----
----	----
----	----

PROJECT TITLE

FIRST STREET RAIN GARDEN

SHEET TITLE

IRRIGATION DETAILS

DESIGN PHASE

BID SET

BROOKWATER
IRRIGATION CONSULTANTS
480 ST. JOHN STREET, SUITE 220
PLEASANTON, CALIFORNIA 94566
TEL 925.855.0417 FAX 925.855.0357
E-MAIL JANET@BROOKWATER.COM

JANET S. LUEHRS
Certified Irrigation Designer
CID
43274

DESIGN BY	
DRAWN BY	EK
CHECKED BY	JL
SCALE	NO SCALE
DATE	JUNE 2, 2022
SHEET	

I-5.3

OF 05

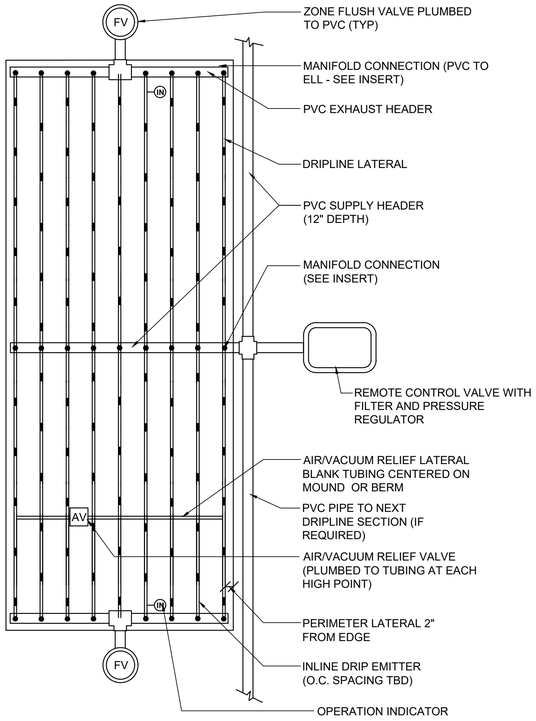

23 CENTER FEED INLINE DRIP LAYOUT

NOT TO SCALE

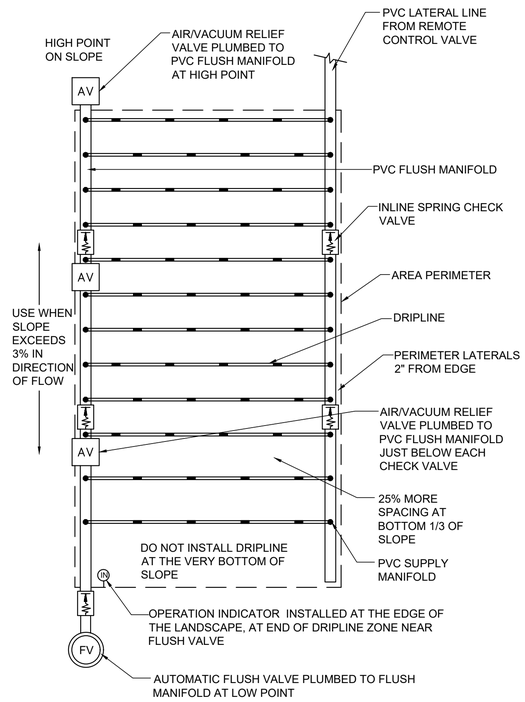

24 INLINE DRIP LAYOUT FOR SLOPES

NOT TO SCALE

"I HAVE COMPLIED WITH THE CRITERIA OF THE MODEL WATER EFFICIENT LANDSCAPE ORDIANCE AND HAVE APPLIED THEM FOR THE EFFICIENT USE OF WATER IN THE IRRIGATION DESIGN PLAN."

CITY OF
Walnut Creek
LANDSCAPE WATER USE STATEMENT

PROJECT NAME: **FIRST STREET RAIN GARDEN**
PROJECT ADDRESS: 989 First Street

PREPARED BY: JANET LUEHRS (CID, CLIA #43274)
BROOKWATER INC., IRRIGATION CONSULTANTS
480 SAINT JOHN STREET, SUITE 220
PLEASANTON, CA 94566
925-855-0417
925-855-0357 (FAX)
Janet@Brookwater.com (e-mail)

"I have complied with the criteria of the Water Efficient Landscape Ordinance and applied them accordingly for the efficient use of water in the irrigation design plan."

Signed: Janet Luehrs

PART ONE	**MAXIMUM APPLIED WATER ALLOWANCE (MAWA)**	
		MAWA = ETo x .62 x [(ETAFx HA) + ((1-ETAF) x SLA)]
	YEARLY ETo	46.2
	CONVERSION FACTOR	0.62
	ETAF	0.45
	TOTAL IRRIGATED LANDSCAPE AREA (HA)	2,145 SQUARE FEET
	SPECIAL LANDSCAPE AREA (SLA)	0 SQUARE FEET
	LANDSCAPE WATER ALLOWANCE	**27,649 GALLONS PER YEAR**
	TOTAL ACRE FEET	0.08 ACRE FEET
PART TWO	**ESTIMATED TOTAL WATER USE (ETWU)**	
		(AVERAGE *ETAF* AND *ETWU* FROM WATER EFFICIENT LANDSCAPE WORKSHEET)
	AVERAGE ETAF FOR REGULAR LANDSCAPE AREAS (TOTAL ETAF x AREA / TOTAL AREA)	0.41
	ETWU FOR REGULAR LANDSCAPE AREAS	**25,076 GALLONS PER YEAR**
	SITE WIDE ETAF	0.41
	ETWU FOR ALL LANDSCAPE AREAS	**25,076 GALLONS PER YEAR**
	TOTAL ACRE FEET	0.08 ACRE FEET

FIRST STREET RAIN GARDEN
WATER EFFICIENT LANDSCAPE WORKSHEET

Reference Evapotranspiration (Eto) **46.2**

ZONE NO.	PLANT TYPE	HYDROZONE* (PLANT WATER USE)	PLANT FACTOR (PF)	IRRIGATION METHOD**	IRRIGATION EFFICIENCY (IE)	ETAF (PF/IE)	HYDROZONE AREA (HA) (Sq Ft)	ETAF x HA	ESTIMATED TOTAL WATER USE (ETWU)	% LANDSCAPE AREA
REGULAR LANDSCAPE AREA										
C-1	SHRUB	LW	0.30	DL	0.81	0.37	1,352	501	14,343	63.0%
C-2	BIORETENTION	MW	0.50	DL	0.81	0.62	253	156	4,473	11.8%
C-3	SHRUB	LW	0.30	B	0.81	0.37	465	172	4,933	21.7%
C-4	SHRUB	MW	0.50	B	0.81	0.62	75	46	1,326	3.5%
TOTALS (REGULAR LANDSCAPE AREAS)							**2,145**	**875**	**25,076**	**100.0%**
SPECIAL LANDSCAPE AREA										
	0			0		1.00	0	0	0	0.0%
TOTALS (SPECIAL LANDSCAPE AREAS)							**0**	**0**	**0**	**0.0%**
TOTALS FOR ALL AREAS							***2,145***	***875***	***25,076***	***100%***

*Hydrozone Description	Total Sq. Ft.	% of Landscape
Cool Season Turf (CST)	0	0.0%
Warm Season Turf (WST)	0	0.0%
High Water Use Plants (HW)	0	0.0%
Bioretention Plants (BR)	0	0.0%
Medium Water Use Plants (MW)	328	15.3%
Low Water Use Plants (LW)	1,817	84.7%
Very Low Water Use Plants (VLW)	0	0.0%
Water Feature	0	0.0%
Special Landscape Area (SLA)	0	0.0%
TOTAL	2,145	100.0%

**Irrigation Method	Total Sq. Ft.	% of Landscape
Rotor (FC-R, PC-R)	0	0.0%
Multi-Stream Rotator (MR)	0	0.0%
Spray (S)	0	0.0%
Bubbler (B)	540	25.2%
Drip (D)	0	0.0%
In-Line Drip (DL)	1,605	74.8%
Micro Spray (MS)	0	0.0%
Other (O)	0	0.0%

REVISIONS

DATE	DESCRIPTION
----	----
----	----
----	----

PROJECT TITLE
FIRST STREET RAIN GARDEN

SHEET TITLE
IRRIGATION DETAIL & WORKSHEET

DESIGN PHASE
BID SET

BROOKWATER
IRRIGATION CONSULTANTS
480 ST. JOHN STREET, SUITE 220
PLEASANTON, CALIFORNIA 94566
TEL 925.855.0417 FAX 925.855.0357
E-MAIL JANET@BROOKWATER.COM

JANET S. LUEHRS
Certified Irrigation Designer
CID
IRRIGATION ASSOCIATION
43274

DESIGN BY	
DRAWN BY	EK
CHECKED BY	JL
SCALE	NO SCALE
DATE	JUNE 2, 2022
SHEET	I-5.4

OF 05

FIXTURE SCHEDULE

TYPE	MANUFACTURER AND CATALOG NUMBER	LAMP QUANTITY AND TYPE	WATTAGE AND VOLTAGE	DESCRIPTION	MOUNTING DETAIL
A	EVERGREEN #CRE-B-32-12W-AB-CFA-OCC-PC-2700K	LED	12 WATTS 120 V	32"H X 10"W CRESCENDO BOLLARD WITH ARCHITECTURAL BRONZE FINISH, CLEAR FROSTED LENS, INTEGRAL OCCUPANCY SENSOR AND PHOTOCELL, 2700 KELVIN	1/E-6.1
B	BK LIGHTING #UL-B-F-AR-LED-e64-NSP-BZP	LED	7 WATTS 120 V	RECESSED BRASS LED FLUSH MOUNT UPLIGHT WITH NARROW SPOT, 2700 KELVIN	2/E-6.1
C	FC LIGHTING #FCSL101-UNV-27K-CRI85-BZ	LED	10 WATTS 120 V	9.44"W X 2.8" H X 3"D RECESSED STEP LIGHT, MARINE GRADE, WHITE GLASS LENS, BRONZE FINISH, 2700 KELVIN	3/E-6.1

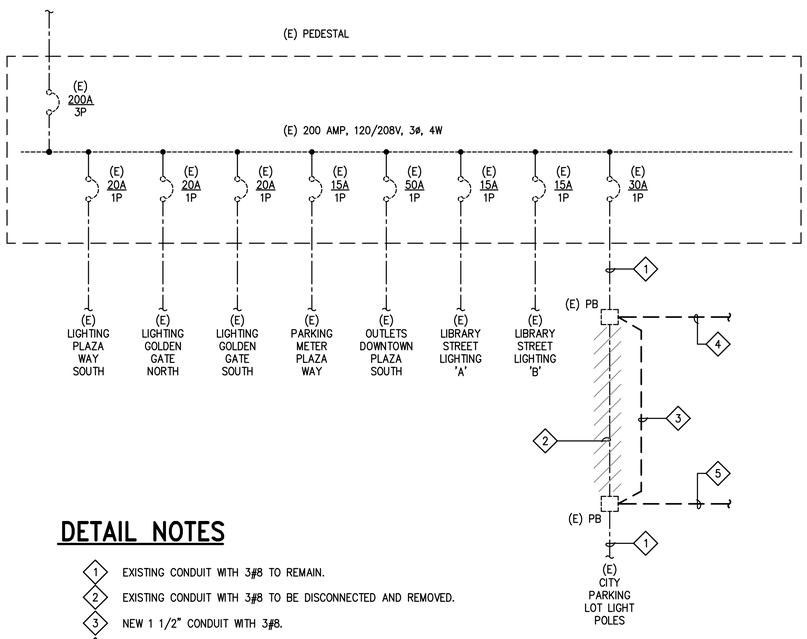

DETAIL NOTES

1. EXISTING CONDUIT WITH 3#8 TO REMAIN.
2. EXISTING CONDUIT WITH 3#8 TO BE DISCONNECTED AND REMOVED.
3. NEW 1 1/2" CONDUIT WITH 3#8.
4. NEW 1 1/2" CONDUIT WITH 3#8 TO IRRIGATION CONTROLLER. SEE SITE PLAN E-6.3.
5. NEW 1 1/2" CONDUIT WITH 3#8 TO NEW LIGHT FIXTURES VIA PHOTOCELL. SEE SITE PLAN E-6.3.

EXISTING SERVICE PEDESTAL ONE-LINE DIAGRAM | NTS | 1

GENERAL ELECTRICAL NOTES

1. ELECTRICAL CONTRACTOR IS TO PROVIDE LABOR, MATERIALS, TRANSPORTATION, EQUIPMENT, RELATED HAND TOOLS, SPECIAL AND OCCASIONAL SERVICES TO CONSTRUCT AND INSTALL THE COMPLETE ELECTRICAL SYSTEM AS SPECIFIED AND SHOWN ON THE PLANS.
2. BONDING JUMPERS SHALL BE INSTALLED TO INSURE CONTINUITY WHERE CONDUIT CONNECTIONS AT CONCENTRIC KNOCKOUTS ARE TO SERVE AS A GROUND.
3. PROVIDE GREEN THWN COPPER GROUND WIRE FROM PANELBOARD GROUND BUS TO ALL BRANCH CIRCUITS.
4. THE ELECTRICIAN SHALL CHECK THE TIGHTNESS OF ALL PANELBOARD BUSES AND CIRCUIT BREAKER LUGS. COMPLETELY VACUUM AND CLEAN INTERIOR OF EQUIPMENT PRIOR TO TURN OVER TO THE OWNER.
5. ALL NEW AND EXISTING PANELBOARDS AND SWITCHBOARDS SHALL BE PROVIDED WITH NEW TYPEWRITTEN DIRECTORIES TO IDENTIFY THE LOCATION OF EACH LOAD SERVED.
6. ALL EQUIPMENT SHALL BE U.L. LISTED AND INSTALLED AS PER LISTING OR LABELING (I.E. MAX. FUSE SIZES MEAN FUSE PROTECTION REQUIRED).
7. REFER TO SHEET E-6.2 FOR ACTUAL LAYOUTS OF ALL LIGHTING FIXTURES AND EQUIPMENT AND VERIFY WITH LANDSCAPE ARCHITECT PRIOR TO ROUGH-IN.
8. CONTRACTOR TO COORDINATE ALL NEW WORK WITH ALL OTHER TRADES FOR A SMOOTH FLOW OF INSTALLATION WORK.
9. COORDINATE EQUIPMENT LOCATIONS AND ELECTRICAL REQUIREMENTS OF ALL EQUIPMENT REQUIRING ELECTRICAL HOOK-UP WITH CONTRACTOR RESPONSIBLE FOR PROVIDING EQUIPMENT AND EQUIPMENT MANUFACTURER DATA SHEETS.
10. ELECTRICAL DRAWINGS ARE DIAGRAMMATIC AND ALTHOUGH THE SIZE AND LOCATIONS OF EQUIPMENT IS SHOWN TO SCALE WHEREVER POSSIBLE, CONTRACTOR SHALL MAKE USE OF MANUFACTURER'S OR OWNER'S DATA AVAILABLE AND/OR VERIFY DATA IN THE FIELD FOR PROVIDING AND INSTALLING CORRECT CABLE LENGTHS.
11. ALL EQUIPMENT MUST BE LISTED, LABELED, OR CERTIFIED BY A NATIONAL RECOGNIZED TESTING LABORATORY (NRTL).
12. ALL CABINETS, DISCONNECT SWITCHES, PULLBOXES, AND TERMINAL BOXES SHALL BE PROVIDED WITH LABELING SYSTEM TO IDENTIFY THE PANEL AND ITS USE. SEE SPECIFICATIONS FOR REQUIREMENTS.
13. MAINTAIN "AS-BUILT" RECORDS AT ALL TIMES, SHOWING EXACT LOCATION OF ALL UNDERGROUND AND/OR CONCEALED CONDUITS AND SERVICES INSTALLED UNDER THIS CONTRACT, INCLUDING CIRCUIT IDENTIFICATION WHERE APPLICABLE. PROVIDE OWNER WITH "AS-BUILT" DOCUMENTS AS INDICATED IN THE PROJECT SPECIFICATIONS.
14. DRAWINGS INDICATE THE LOCATION OF DEVICES, FIXTURES AND EQUIPMENT AND THE CIRCUIT NUMBER AND PANEL DESIGNATION WHICH SUPPLIES THEM. THE CONTRACTOR SHALL VERIFY WITH O.R./VENDORS AND COORDINATE ALL LOCATIONS PRIOR TO INSTALLATION. CONTRACTOR SHALL BE RESPONSIBLE FOR COMPLETELY CONNECTING ALL ELECTRICAL DEVICES TO CIRCUITS INDICATED ON THE DRAWINGS.
15. ALL EQUIPMENT GROUNDING SHALL CONFORM TO ARTICLE 250 OF THE NATIONAL ELECTRIC CODE, LATEST EDITION.
16. ALL EXTERIOR CONDUIT ABOVE GRADE SHALL BE RIGID GALVANIZED STEEL, U.O.N. COAT ALL EXPOSED THREADS WITH GALVANIZING PAINT.
17. ALL CONDUIT SHALL BE CONCEALED, UNLESS OTHERWISE NOTED.
18. ALL UNDERGROUND CONDUIT RUNS SHALL BE SEALED TO PREVENT GAS/MOISTURE ENTERING THE PIPE PER ARTICLE 230-8, 300.5 AND 300.50E OF NEC.
19. ALL EXTERIOR MOUNTED GFI RECEPTACLE OUTLETS TO BE PROVIDED WITH LOCKABLE COVERS, TAYMAC MX3200 OR APPROVED EQUAL.
20. ALL EQUIPMENT/COMPONENTS/DEVICES INSTALLED OUTDOOR SHALL BE U.L. LISTED FOR WET LOCATION.
21. THE CONTRACTOR SHALL VERIFY WITH THE CITY ALL LOCATIONS AND DIMENSIONS OF DEVICES/EQUIPMENT PRIOR TO ROUGH-IN.
22. ALL CONDUIT STUB OUTS AND CONDUITS TERMINATING TO A J-BOX, CABINET, AND THE LIKE SHALL BE PROVIDED WITH INSULATED THROAT. BOX OR CABINET COVER SHALL BE LABELED AS TO USE.

ELECTRICAL SYMBOL LIST

NOTE: DASHED SYMBOLS ON PLANS DENOTE EXISTING DEVICES

- RECESSED WALL FIXTURE
- BOLLARD FIXTURE
- SIGNAGE UPLIGHT
- JUNCTION BOX – SIZED PER CODE
- EXISTING CONDUIT
- BRANCH CIRCUIT CONDUIT CONCEALED UNDERGROUND
- HOMERUN TO PANELBOARD OR OTHER TERMINATION POINT

ANY BRANCH CIRCUIT CONDUIT SHALL BE MINIMUM 3/4"C – 2#12, 1#12 GREEN GROUND UNLESS OTHERWISE NOTED. FOR A GREATER NUMBER OF #12 WIRES: (—HH— = 3/4"C – 3#12, 1#12G) ETC. FOR WIRE SIZES OTHER THAN #12: (—HH— #8 = 3#8, 1#12G), (GROUND SIZED PER CEC, IN CODE SIZE CONDUIT) ETC.

(E)	EXISTING
(N)	NEW
CU	COPPER
GFI	GROUND FAULT INTERRUPTER
GFP	GROUND FAULT PROTECTION
PB	PULL BOX
WP	WEATHERPROOF
UG	UNDERGROUND
U.O.N.	UNLESS OTHERWISE NOTED
VIF	VERIFY IN FIELD
A / 44	FIXTURE TAG – LETTER DENOTES TYPE, NUMBERS INDICATE LAMP QUANTITY AND WATTAGE
1	SHEET NOTE

REVISIONS

DATE	DESCRIPTION

PROJECT TITLE
FIRST STREET RAIN GARDEN
PROJECT #014-9722

SHEET TITLE
ELECTRICAL SYMBOLS, NOTES & SCHEDULES

DESIGN PHASE
BID SET

WRM
Electrical Consultants Incorporated
3397 Mt. Diablo Blvd., Suite C
Lafayette, CA 94549
Tel: 925.385.0649
21-046

REGISTERED PROFESSIONAL ENGINEER
JOSE L. RIOS
No. E 17369
Exp. 9-30-22
ELECTRICAL
STATE OF CALIFORNIA

DESIGN BY	TLK
DRAWN BY	DAM
CHECKED BY	TLK
SCALE	AS NOTED
DATE	JUNE 02, 2022
SHEET	E-6.0

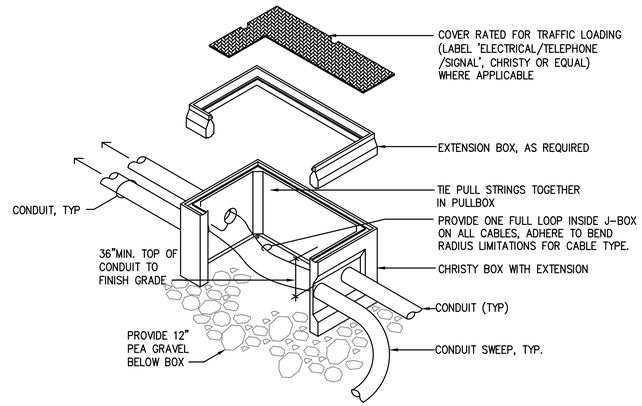

PULLBOX DETAIL | NTS | 4

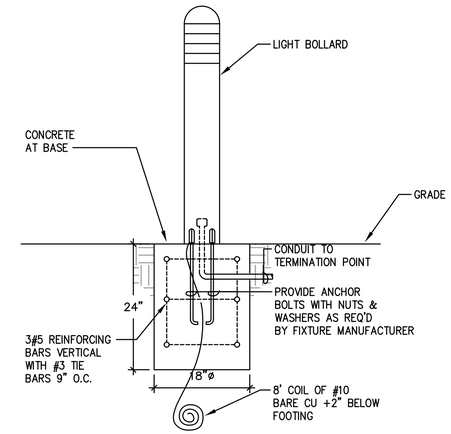

BOLLARD LIGHT DETAIL | NTS | 1

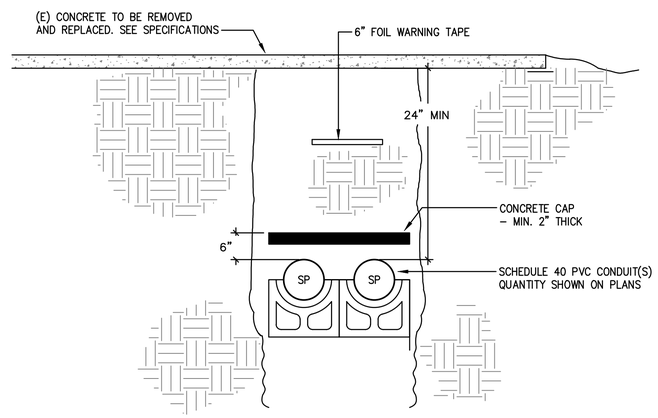

UNDERGROUND CONDUIT DETAIL | NTS | 5

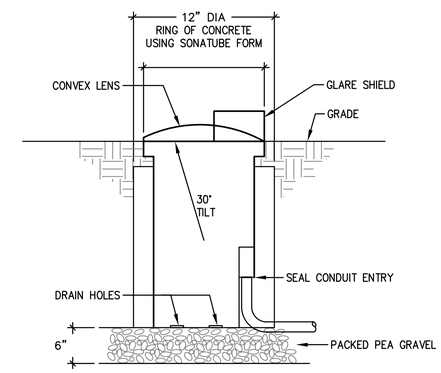

ICON FLOOD LIGHT MOUNTING DETAIL | NTS | 2

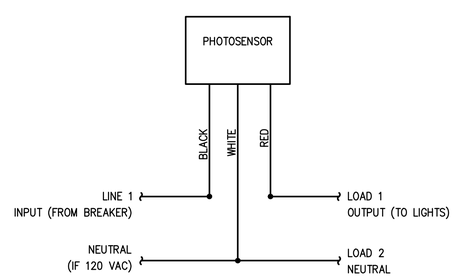

PHOTOSENSOR WIRING DETAIL | NTS | 6

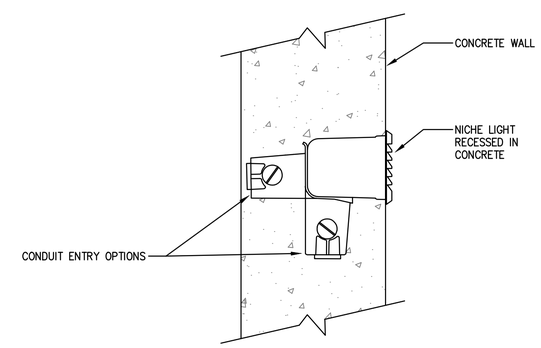

NOTE:

FIXTURE MOUNTED ON SLOPED CONCRETE. SEATWALL. SEE 2/L-3.2 AND 3/L-3.2 FOR SEAT WALL.

NICHE LIGHT IN CONCRETE DETAIL | NTS | 3

REVISIONS

DATE	DESCRIPTION

PROJECT TITLE

FIRST STREET RAIN GARDEN

PROJECT #014-9722

SHEET TITLE

ELECTRICAL DETAILS

DESIGN PHASE

BID SET

WRM

Electrical Consultants Incorporated
3397 Mt. Diablo Blvd., Suite C
Lafayette, CA 94549
Tel: 925.385.0649
21-046

REGISTERED PROFESSIONAL ENGINEER
JOSE L. RIOS
No. E 17369
Exp. 9-30-22
ELECTRICAL
STATE OF CALIFORNIA

DESIGN BY	TLK
DRAWN BY	DAM
CHECKED BY	TLK
SCALE	AS NOTED
DATE	JUNE 02, 2022
SHEET	E-6.1

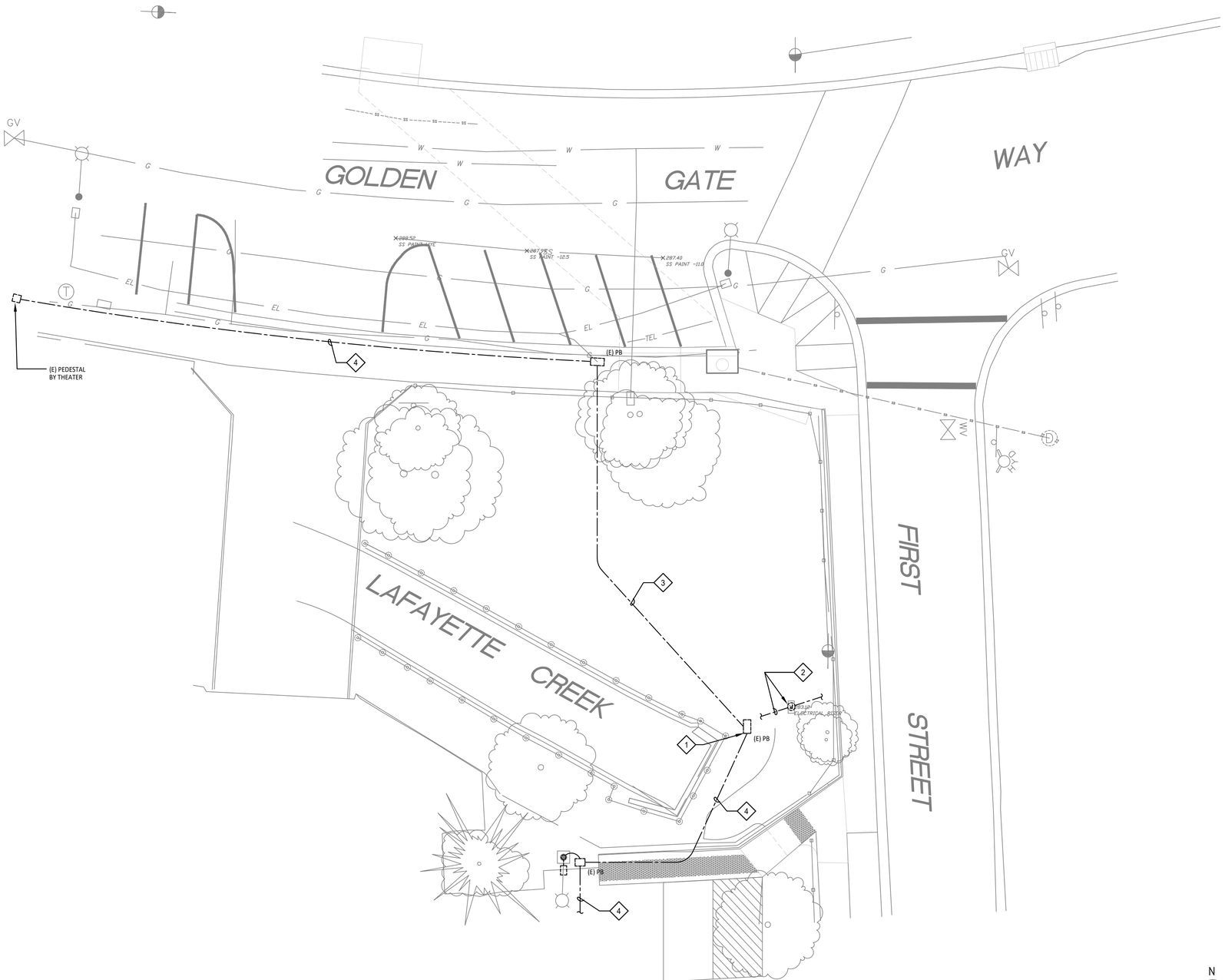

ELECTRICAL SITE PLAN - DEMOLITION | 1" = 10'-0" | 1

GENERAL NOTES

1. ALL EXISTING SITE CONNECTIONS TO REMAIN, UON.

SHEET NOTES

1. EXISTING PULLBOX TO REMAIN.
2. EXISTING JUNCTION BOX TO BE REMOVED.
3. EXISTING CONDUIT AND 3#8 CONDUCTORS TO BE DISCONNECTED AND REMOVED. SEE E6.3 FOR RECONNECTION.
4. EXISTING CONDUIT AND 3#8 CONDUCTORS TO REMAIN.

REVISIONS

DATE	DESCRIPTION

PROJECT TITLE
FIRST STREET RAIN GARDEN
PROJECT #014-9722

SHEET TITLE
ELECTRICAL DEMOLITION SITE PLAN

DESIGN PHASE
BID SET

WKM
Electrical Consultants Incorporated
3397 Mt. Diablo Blvd., Suite C
Lafayette, CA 94549
Tel: 925.385.0649
21-046

REGISTERED PROFESSIONAL ENGINEER
JOSE L. NIE
No. E 17369
Exp. 9-30-22
ELECTRICAL
STATE OF CALIFORNIA

DESIGN BY	TLK
DRAWN BY	DAM
CHECKED BY	TLK
SCALE	AS NOTED
DATE	JUNE 02, 2022
SHEET	E-6.2

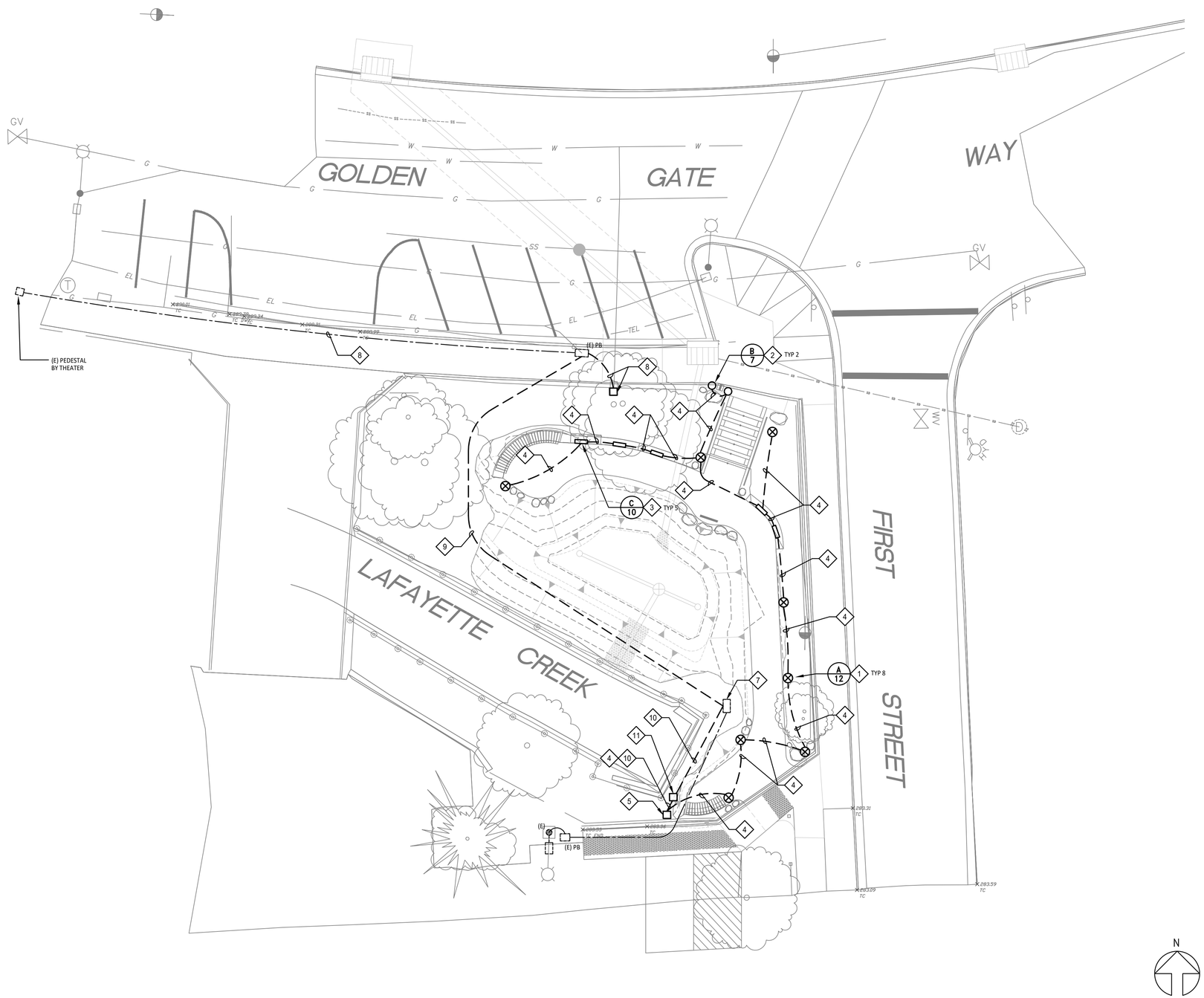

GENERAL NOTES

1. ALL EXISTING SITE CONNECTIONS TO REMAIN, UON.

SHEET NOTES

1. NEW PATHWAY BOLLARD.
2. NEW CREEK ICON UPLIGHT.
3. NEW RECESSED WALL LIGHT.
4. NEW 1" CONDUIT WITH 3#8 TO NEW LIGHT FIXTURE.
5. NEW PHOTOCELL INTERMATIC EK4436SM. MOUNT ON WOOD POST SIMILAR TO DETAIL 1/L-3.3. SEE 6/E-6.1 FOR WIRING DIAGRAM.
6. CONDUIT AND CONDUCTORS TO EXISTING POWER SOURCE.
7. RECONNECT EXISTING PULLBOX. SPLICE NEW AND EXISTING 3#8.
8. PROVIDE 120V POWER FOR IRRIGATION CONTROLLER. RUN 2#8 IN NEW AND EXISTING CONDUIT TO POWER PEDESTAL AT THEATER.
9. NEW 1 1/2" CONDUIT WITH 3#8 TO RECONNECT EXISTING PARKING LOT LIGHTING.
10. NEW 1" CONDUIT WITH 3#8 TO NEW PHOTOCELL.
11. NEW CHRISTY BOX.

ELECTRICAL SITE PLAN - NEW | 1" = 10'-0" | 1

REVISIONS	
DATE	DESCRIPTION

PROJECT TITLE
FIRST STREET RAIN GARDEN
PROJECT #014-9722

SHEET TITLE
ELECTRICAL SITE PLAN - NEW

DESIGN PHASE
BID SET

WRM
Electrical Consultants Incorporated
3397 Mt. Diablo Blvd., Suite C
Lafayette, CA 94549
Tel: 925.385.0649
21-046

REGISTERED PROFESSIONAL ENGINEER
JOSE L. NIE
No. E 17369
Exp. 9-30-22
ELECTRICAL
STATE OF CALIFORNIA

DESIGN BY	TLK
DRAWN BY	DAM
CHECKED BY	TLK
SCALE	AS NOTED
DATE	JUNE 02, 2022
SHEET	E-6.3

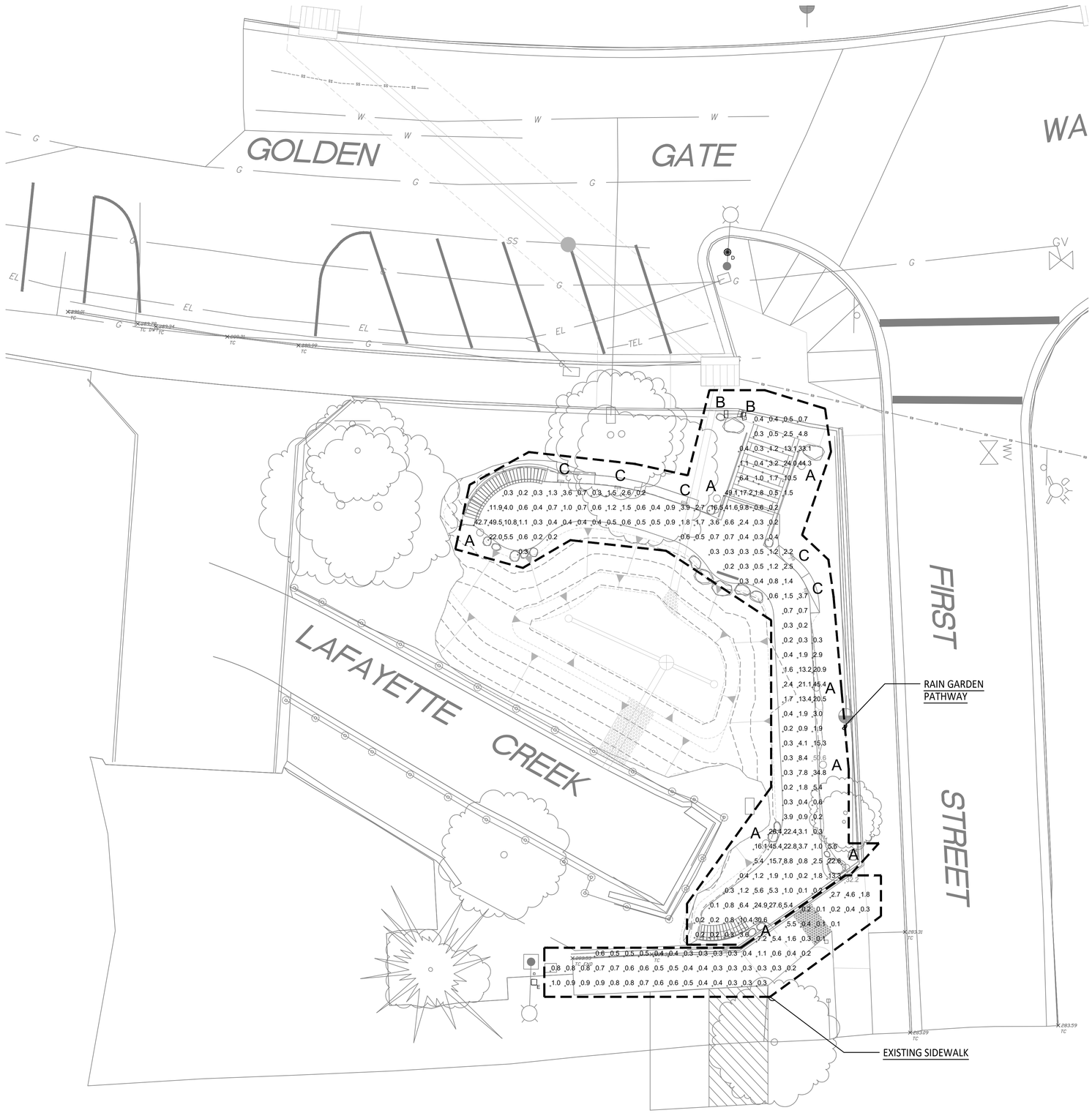

Statistics				
Description	Symbol	Avg	Max	Min
Existing sidewalk	+	1.4 fc	32.2 fc	0.1 fc
Rain Garden Pathway	+	6.0 fc	50.6 fc	0.1 fc

Schedule

Symbol	Label	Quantity	Manufacturer	Catalog Number	Description	Number Lamps	Wattage
○	A	8	Evergreen Lighting	CRE-B-47-22W	ARCHITECTURAL HALF ROUND BOLLARD WITH CUTOFF DISTRIBUTION WITH CLEAR FROSTED ACRYLIC LENS MEETS THE "NIGHTTIME FRIENDLY" CRITERIA	1	12
△	B	2	B-K LIGHTING, INC.	NS-LED-e66-NSP-12	MACHINED CYLINDRICAL METAL HOUSING, 1 BLACK CIRCUIT BOARD WITH 3 LEDS, ONE CLEAR CONICAL PLASTIC OPTIC PER LED WITH SEMI-HEMISPHERICAL RECESSED CENTER TOWARD LED, MOLDED BLACK PLASTIC OPTIC MOUNTING FRAME, CLEAR MICRO-PRISMATIC FLAT GLASS LENS IN MACHINED CYLINDRICAL BLACK PAINTED METAL LENS FRAME. LENS PRISMS OUT.	3	7
▭	C	5	Fc Lighting	FCSL101-120V-4K-SS		1	10

N

ELECTRICAL LIGHTING PLAN - PHOTOMETRICS | 1/8" = 1'-0" | 1

REVISIONS

DATE	DESCRIPTION

PROJECT TITLE
FIRST STREET RAIN GARDEN
PROJECT #014-9722

SHEET TITLE
ELECTRICAL SITE PLAN - NEW

DESIGN PHASE
BID SET

WKM
Electrical Consultants Incorporated
3397 Mt. Diablo Blvd., Suite C
Lafayette, CA 94549
Tel: 925.385.0649
21-046

REGISTERED PROFESSIONAL ENGINEER
JOSE L. MC
No. E 17369
Exp. 9-30-22
ELECTRICAL
STATE OF CALIFORNIA

DESIGN BY	TLK
DRAWN BY	DAM
CHECKED BY	TLK
SCALE	AS NOTED
DATE	JUNE 02, 2022
SHEET	E-6.4