THIS DRAWING IS AN OVERALL REPRESENTATION OF THE APPARATUS AS PROPOSED.

THE EXACT LOCATIONS OF ACCESSORIES OR COMPONENTS MAY BE REVISED PENDING COMPLETE ENGINEERING REVIEW OF THE OPTION CONTENT OF THE ORDER.

IF THERE IS A DISCREPANCY BETWEEN THE BODYBUILDER PRINT AND THE WRITTEN PROPOSAL; THE SPECIFICATIONS WITHIN THE PROPOSAL PREVAIL.

This drawing along with any changes made and initialed by both the "Fire Department" & HME, Inc. represents what will be constructed and supplied to the "Fire Department." Any changes to the contract specifications and drawing after today's date will be addressed via appropriate change order signed and approved by both the "Fire Department" & HME, Inc.

APPROVED BY:_____ TITLE: _____
FIRE DEPARTMENT

APPROVED BY:_____ TITLE: _____
HME, Incorporated

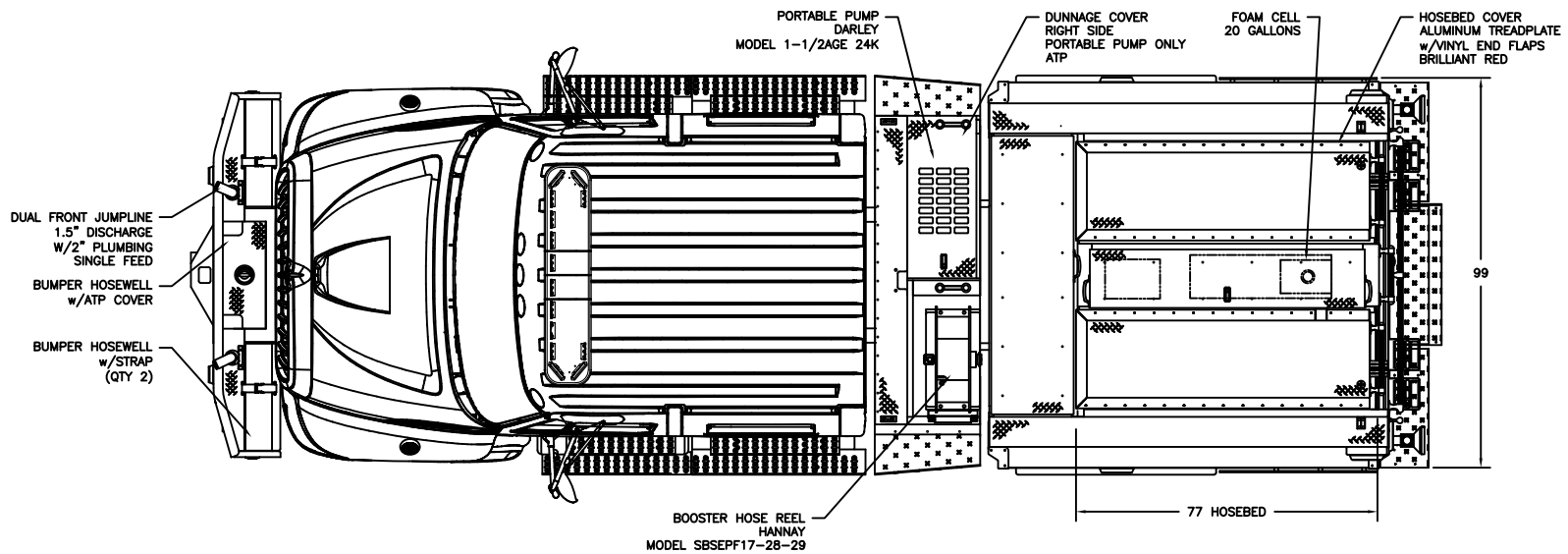

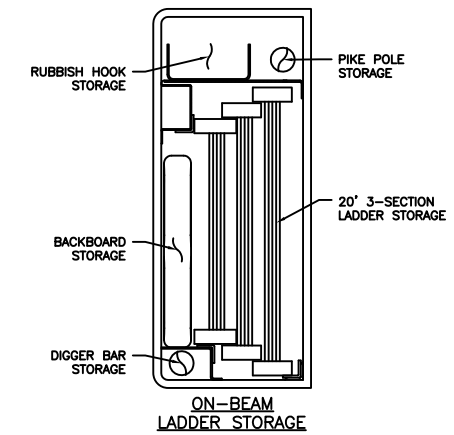

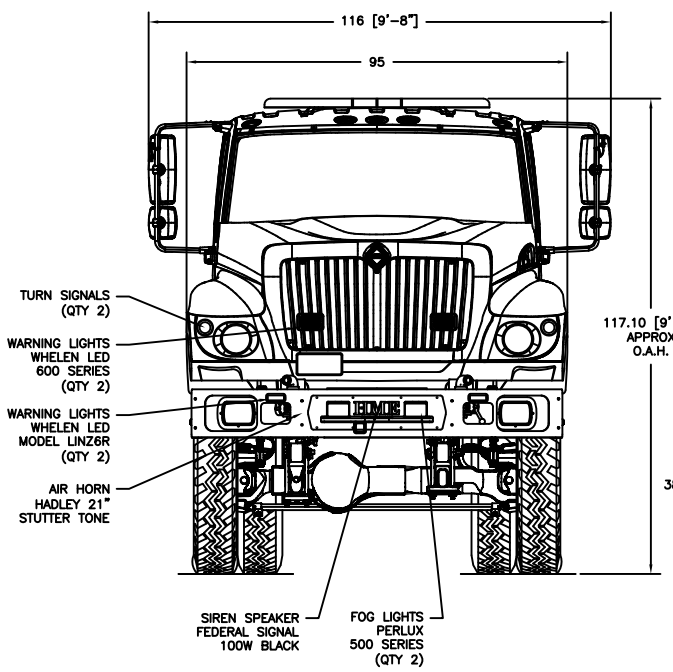

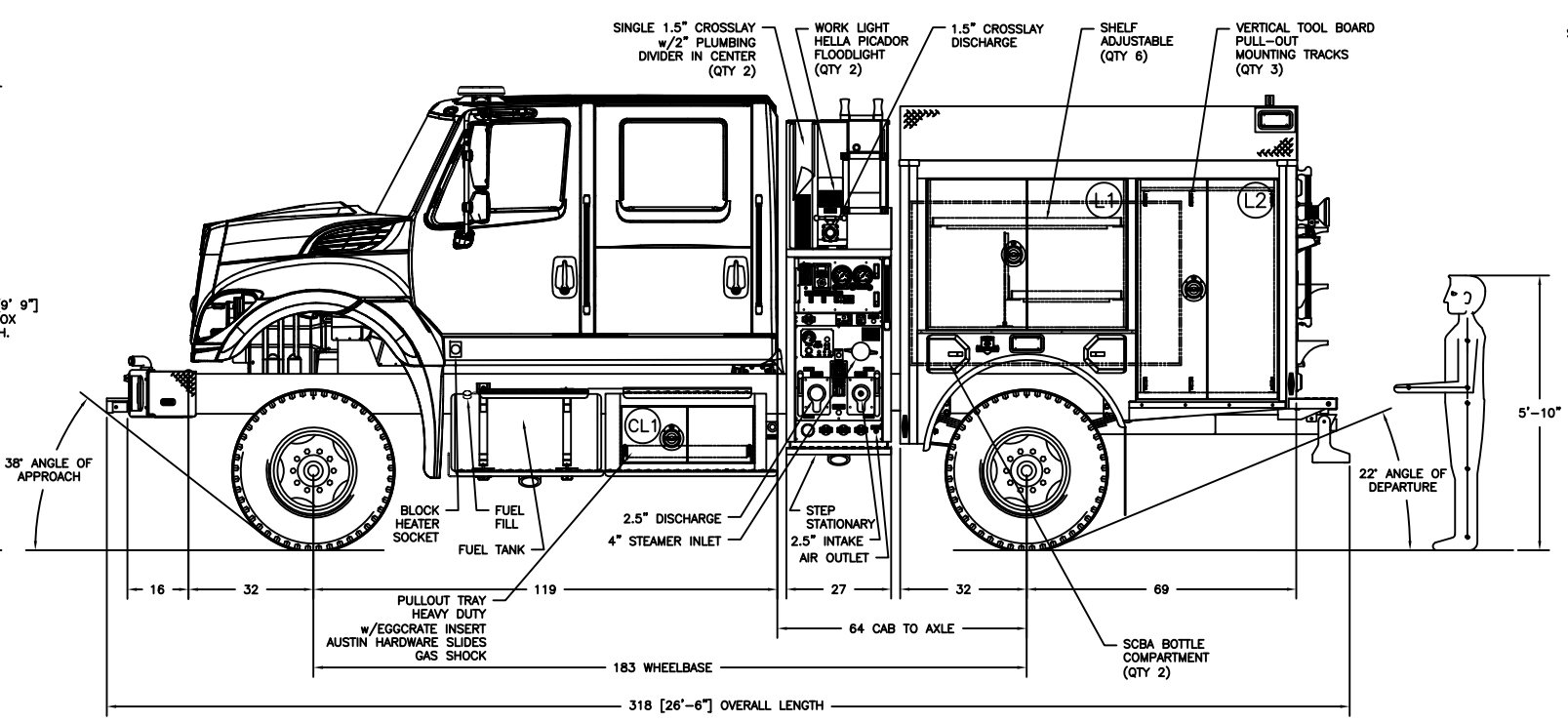

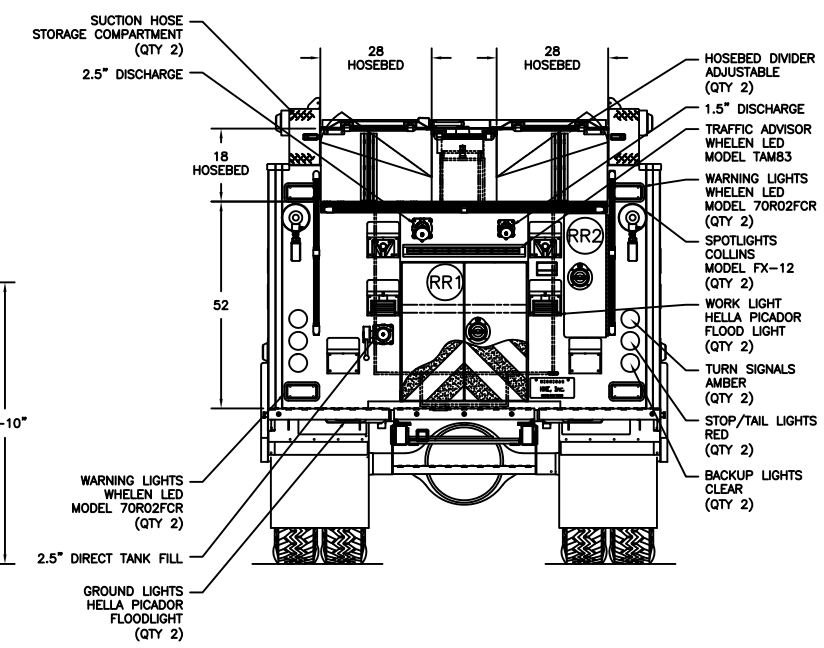

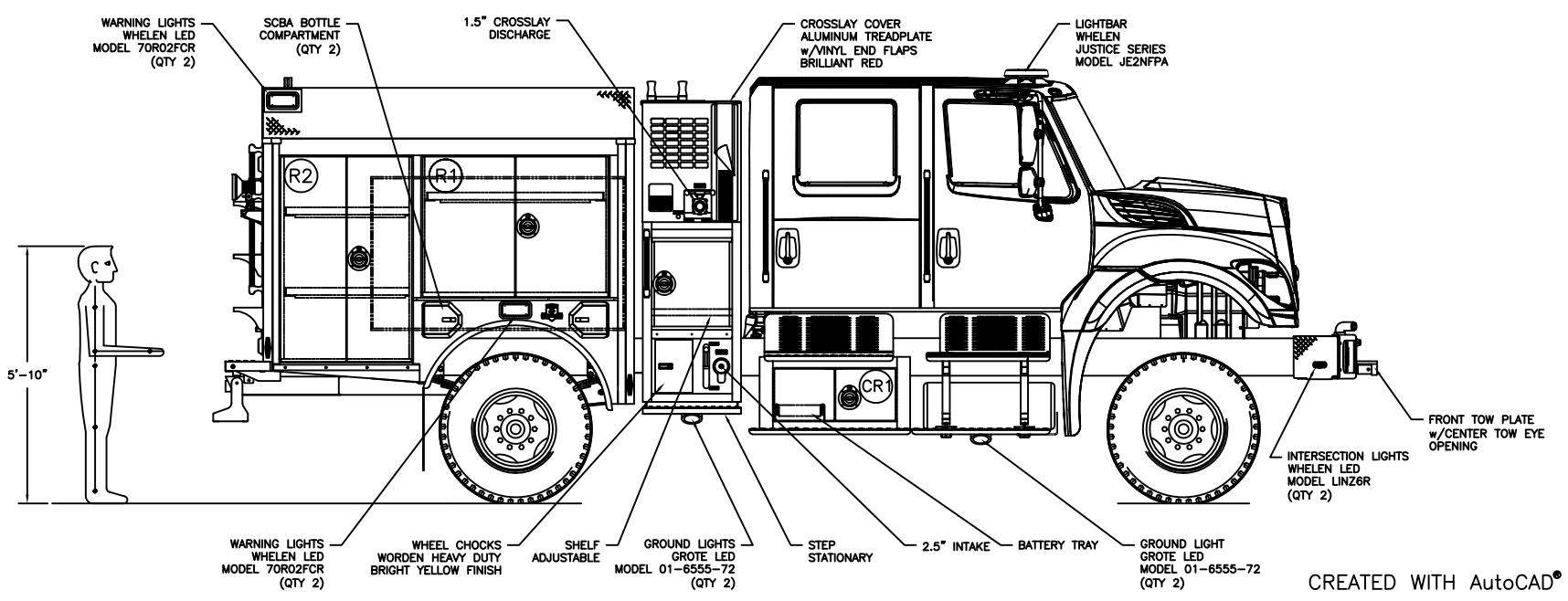

COMPARTMENTATION

COMPT.	BEHIND DOOR WIDTH	BEHIND DOOR HEIGHT	BEHIND DOOR DEPTH	CLEAR OPENING DOOR WIDTH	CLEAR OPENING DOOR HEIGHT	COMPT. VOLUME
L1: UPPER	51.5"	10.5"	11"	49.5"	36"	3.5 FT ³
L1: LOWER	51.5"	32"	23"	34"	53"	21.9 FT³
L2: UPPER	36"	10.5"	11"	34"	53"	2.4 FT ³
L2: LOWER	36"	49.5"	23"	34"	53"	23.7 FT³
CL1:	41"	16.5"	21.5"	34.5"	13.5"	8.4 FT ³
R1:	51.5"	42.5"	11"	49.5"	36"	13.9 FT³
R2: UPPER	36"	42.5"	11"	34"	53"	9.7 FT ³
R2: LOWER	36"	17"	23"	34"	53"	8.1 FT ³
CR1:	37"	13"	22.5"	31"	10"	6.2 FT ³
RR1:	48"	48.5"	26.5"	30"	32"	35.7 FT³

LET	BY	DATE	REVISION
A	ATU	29 JAN '13	ORIGINAL RELEASE

HME INCORPORATED
1950 BYRON CENTER AVE.
WYOMING, MI. 49519

THIS PRINT IS PROVIDED ON A RESTRICTED BASIS AND IS NOT TO BE USED IN ANY WAY DETRIMENTAL TO THE INTERESTS OF HME. INC.

NAME
HME MODEL 34D DEMO

DRAWN	DATE	APPROVED	DRAWING FILE
A. UDELL	29 JAN '13	N/A	22650-HME MODEL 34D DEMO.DWG

THIRD ANGLE PROJECTION | SIZE B | NUMBER 22650 | SCALE NTS | SHEET 1 OF 1

CREATED WITH AutoCAD®